15W Constant Current power supply

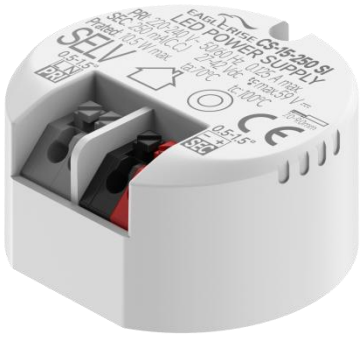

■Approve

CECB SELV

Features

- Class II，SELV，Built-in
- Input Voltage： 220-240VAC
- Protections：SCP/OLP/OVP
- Power Factor：0.55C
- Efficiency：≥82%
- 5 years warranty
- IP20

Applications

- LED panel、LED ceiling light
  LED spot light

◆ Description

CS-15-XXX SI is a 15W constant current LED driver with 250 to 350mA output current. With it's compact dimensions from Φ42x21mm. It is easy to integrate in LED Panel, spot and ceiling lights product. To ensure trouble-free operation, protection is provided against output short circuit and over Load.

◆ Model code

CS-15-XXX SI

- Flicker-free
- Current
- Power
- Series

◆ Specification

Output	Constant Current (mA)	250	280	300	350
	Voltage Range(VDC)	27-42			
	Unload voltage Max.	59VDC			
	Current Accuracy	±5%			
	Output HF current ripple(≥1KHz)	±5%			
	Output LF current ripple(≤120Hz)	±5%			
	SVM	≤0.4			
	Pst	≤1			
	Efficiency(Typ.)	≥82%@Full load,230V			
Input	Rated input voltage	220-240VAC			
	Range of input voltage	198-264VAC			
	Maximum voltage	300VAC@1 h maximum,unit might not operate in this abnormal condition			
	Frequency(Hz)	50/60 Hz			
	Displacement factor	≥0.7			
	Power Factor	0.5			
	Input Current max (mA)	125mA		150mA	175mA
	Start-up time	＜0.5S			
	No Load Power	≤0.5W			
Protection	Over Load Protection	103-130%			
		YES/Auto Resume			
	Over Voltage Protection	59VDC			
		YES/Auto Resume			
	Short circuit Protection	YES/Auto Resume			
	Over Temperature Protection	YES/Auto Resume			
capability	Surge capability (L-N)	1KV			
	Surge capability (L/N-Ground)	2KV			
Environment	Operating Temperature	-20℃~+70℃			
	Humidity	20%-90%RH			
	Tc	100℃			
	Storage Temperature	-25℃~+80℃			
	Life time	＞50000h@Tc=85℃			
	Noise	≤20dB(A)@10cm			
Surface	Dimension	Φ42 x 21mm			
	material	PC			
Standards	Safety	GB19510. 1, GB19510. 14;IEC61347- 1, IEC61347-2- 13;EN62384			
	EMC	GB/T17743, GB17625. 1;EN55015, EN61000-3-2, EN61000-3-3, EN61547;EN61000-4-5			
	Energy Efficiency	Erp2.0 EU 2019/2020			

	RoHS	RoHS (2011/65/EU) (EU)2015/863
Note	1.All parameters not specially mentioned are measured at 230VAC input , full load and 25℃ of ambient temperature. 2.Ripple & Noise are measured at 20MHz of bandwidth by using a 300mm twisted pair-wire terminated with a 0.1uF & 47 uF parallel capacitor. 3.Switch and dimmer are not recommended to connect between this product output and luminaries. 4.Surge capability (L/N-Ground) was measured with a metal plate 2-3mm underlay. 5.All Eaglerise power supply are complied with EMI regulations. Since they are belong to component and will be installed inside system enclosure. When they are integrated into a system, the EMI characteristics of the system must be re-verified again.	

◆ Model list

Number	Model number	Output			
		Current (mA)	Voltage (VDC)	Voltage No load (VDC)	Power (W)
1	CS-15-250 SI	250	27-42	59	10.5
2	CS-15-280 SI	280			11.8
3	CS-15-300 SI	300			12.6
4	CS-15-350 SI	350			14.7

◆ Inrush Current

I_{peak}	T_{width}	B10	B16	B20	C10	C16	C20
8.12A	114μs	45pcs	73pcs	91pcs	45pcs	73pcs	91pcs

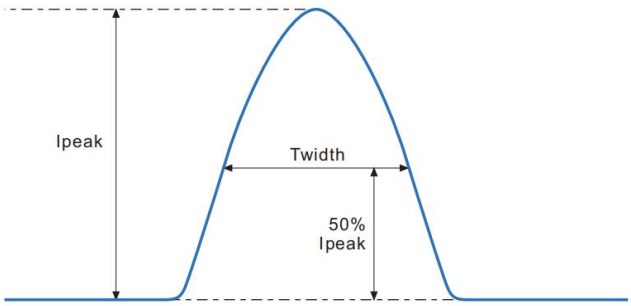

Remarks:
1.The number of drives mounted under different MCBs in the table is the maximum value. Please do not exceed this number during installation.
2.Different brands and models of miniature circuit breakers, the number of drives mounted will be slightly different.

◆ Wiring diagram

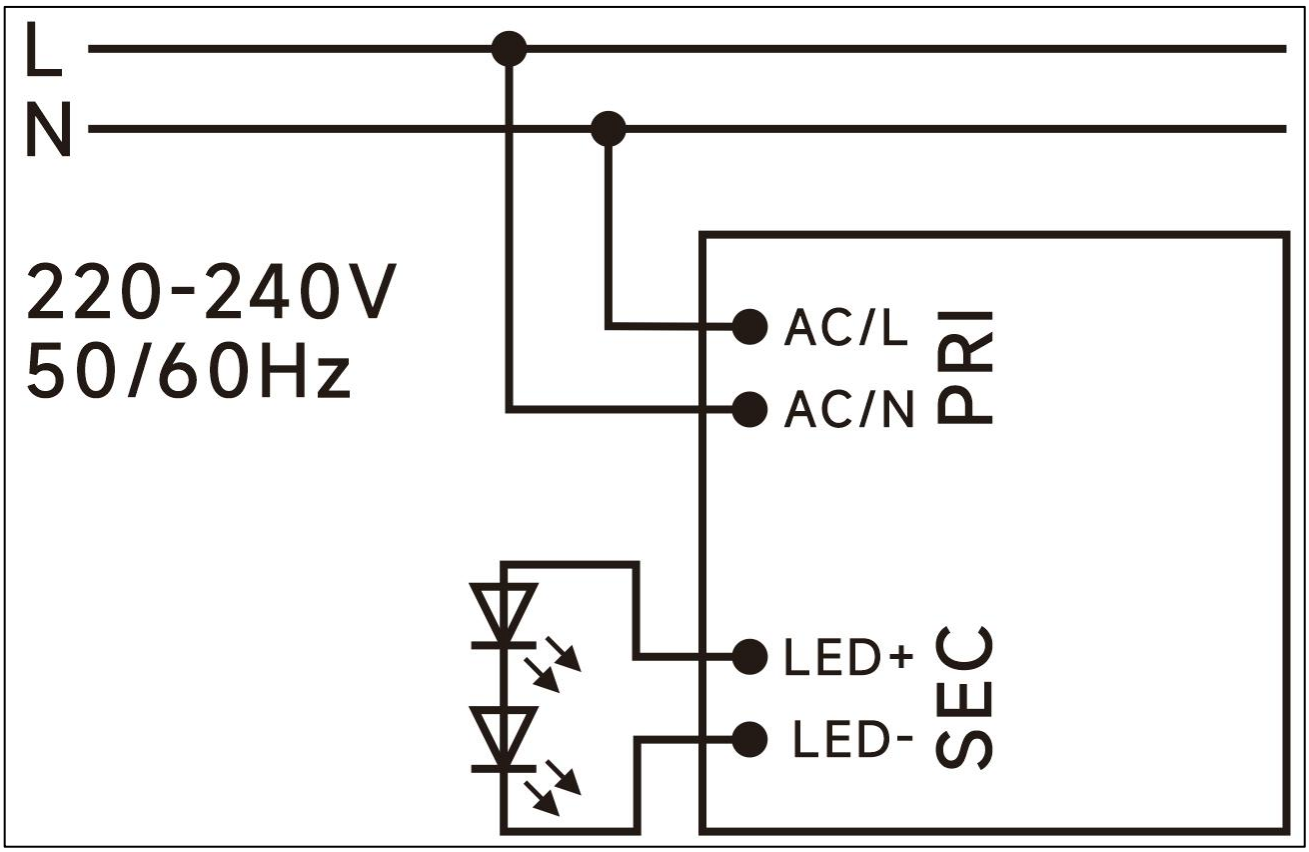

◆ 2D diagram

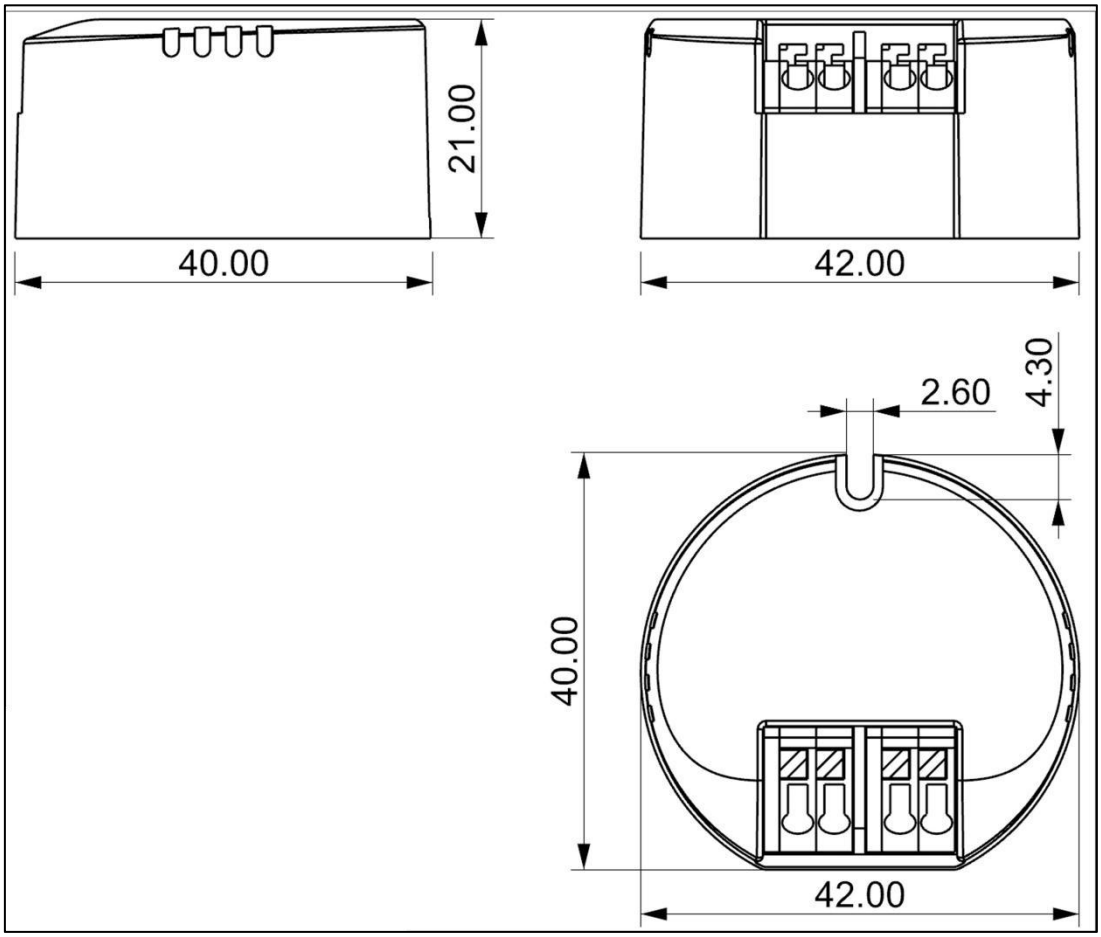

Terminal

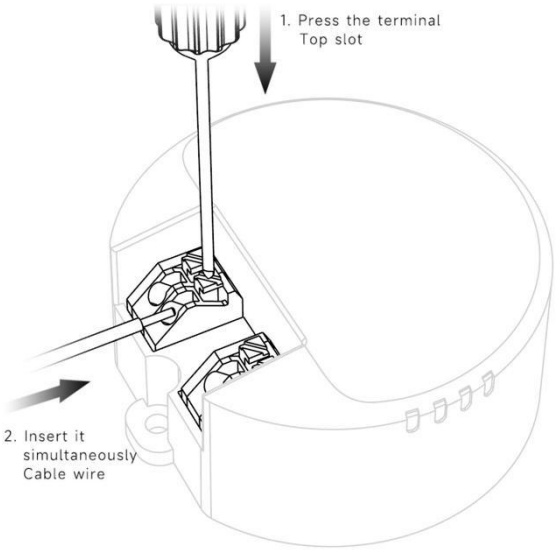

◆ Wiring & Connections

Specification item		Value （Unit ）
Input	Input wire cross-section	0.5...1.5 mm^2
	Input wire gauge.	16...20 AWG
	Input wire strip length	7...9mm
Output	Output wire cross-section	0.5...1.5 mm^2
	Output wire gauge.	16...20 AWG
	Output wire strip length	7...9mm

Note:Solid wire is risky to use on an angled terminal.Stranded wire is recommended for this kind of use.

◆ Curve for CS-15-XXX SI, Io=350mA

Lifetime vs. Temperature Curve

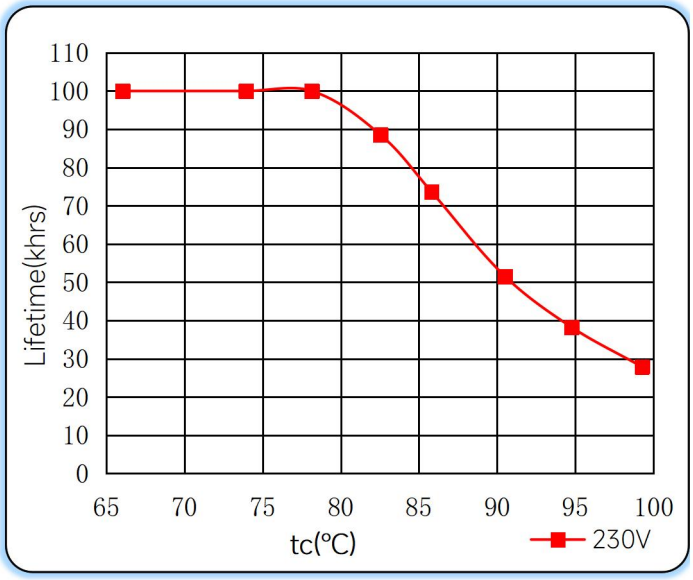

Efficiency vs. Load

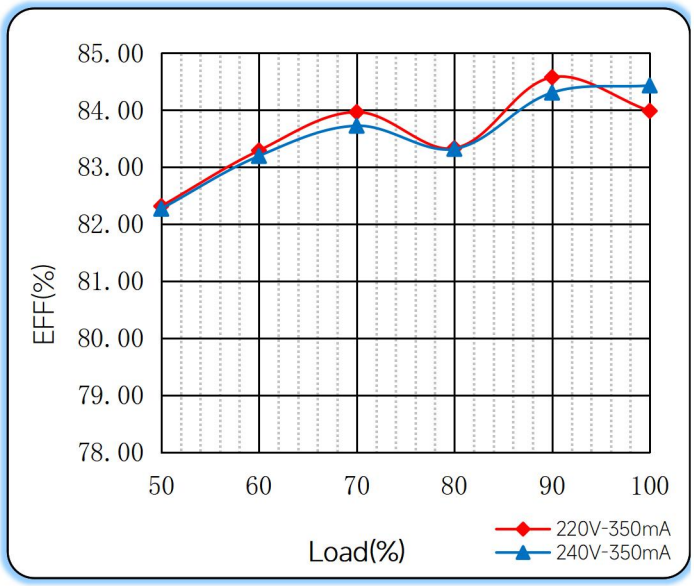

Power Factor Characteristics

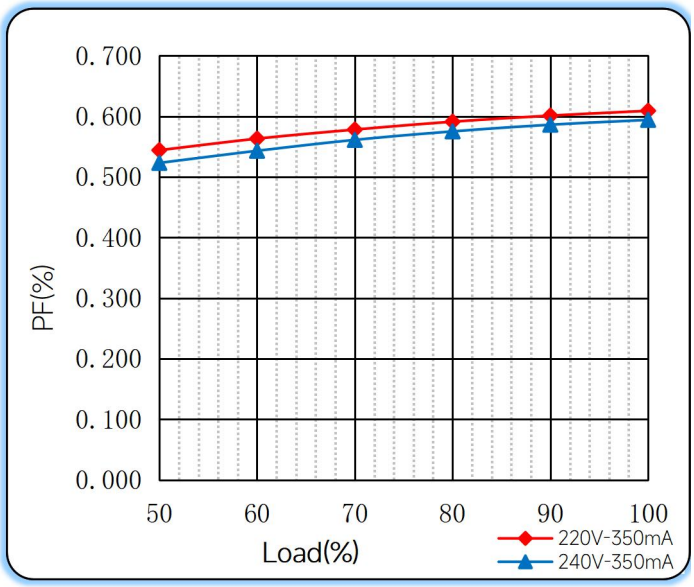

THD vs. Load

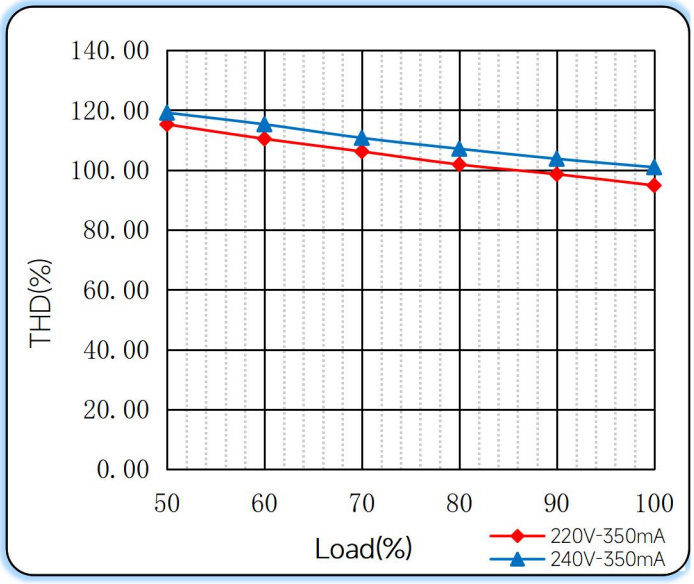

◆ Operating window

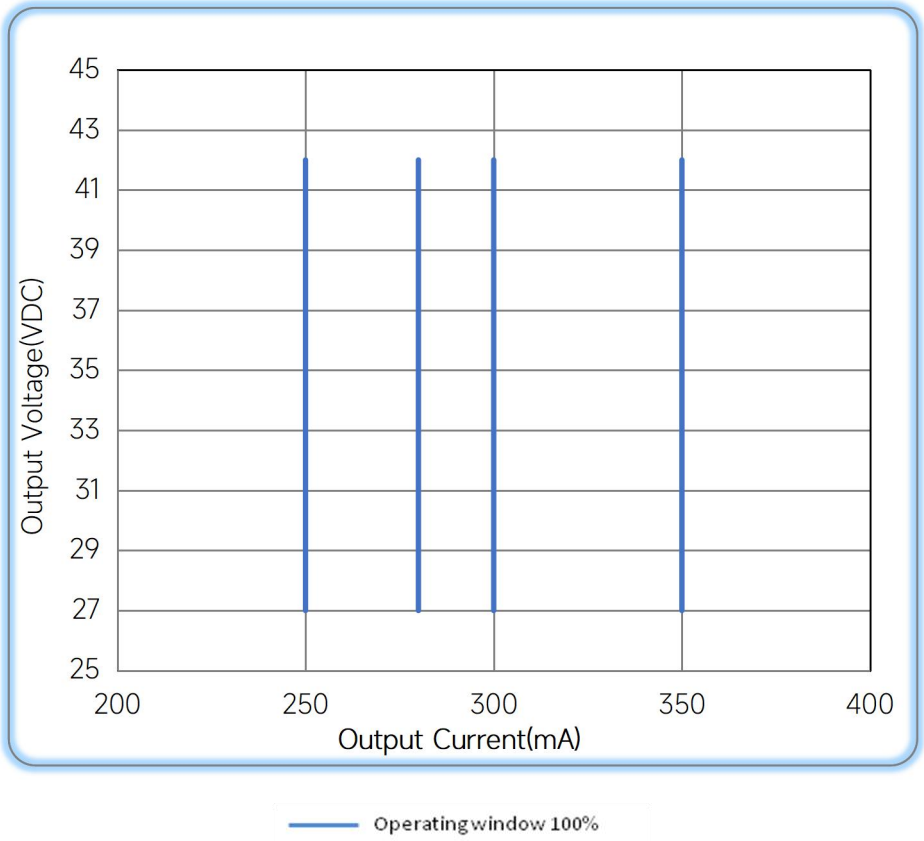

◆ Revision Updates

ITEM	BEFORE	AFTER	VERSION	DATE
Initial			A	2023/07/12
Life time	> 50000h@Tc=90°C	> 50000h@Tc=85°C	B	2023/12/18
Ta/TC	60°C/90°C	70°C/100°C	C	2024/04/10

Remark:The final interpretation of the contents of the specification belongs to Eaglerise Electric & Electronic (China) Co., Ltd.