22W Constant Current power supply

Features

- Class II，SELV，Built-in
- Input Voltage： 220-240VAC
- Protections：SCP/OLP/OVP
- Power Factor：0.55C
- Efficiency：85%
- 5 years warranty
- IP20

Applications

- LED panel、LED ceiling light
  LED spot light

■**Approve**

CE CB EAC CCC SELV

◆ Description

CS-22-XXX SI is a 22W constant current LED driver with 350 to 550mA output current. With it's compact dimensions from Φ50x22mm. It is easy to integrate in LED Panel, spot and ceiling lights product. To ensure trouble-free operation, protection is provided against output short circuit and over Load.

◆ Model code

CS-22- XXX SI

- SI → Flicker-free
- XXX → Current
- 22 → Power
- CS → Series

◆ Specification

Output	Constant Current (mA)	350	400	450	500	550
	Voltage Range(VDC)	27-42				27-40
	Unload voltage Max.	59VDC				
	Current Accuracy	±5%				
	Output HF current ripple(≥1KHz)	±5%				
	Output LF current ripple(≤120Hz)	±5%				
	SVM	≤0.4				
	Pst	≤1				
	Efficiency(Typ.)	85%				
Input	Rated input voltage	220-240VAC				
	Range of input voltage	198-264VAC				
	Maximum voltage	300VAC@1 h maximum,unit might not operate in this abnormal condition				
	Frequency(Hz)	50/60 Hz				
	Displacement factor	≥0.7				
	Power Factor	0.55C				
	Input Current max (mA)	0.188A	0.22A	0.24A	0.27A	0.28A
	Start-up time	＜0.5S				
	No Load Power	≤0.5W				
Protection	Over Load Protection	103-140%				
		YES/Auto Resume				
	Over Voltage Protection	59VDC				
		YES/Auto Resume				
	Short circuit Protection	YES/Auto Resume				
	Over Temperature Protection	YES/Auto Resume				
capability	Surge capability (L-N)	1KV				
	Surge capability (L/N-Ground)	2KV				
Environment	Operating Temperature	-20℃~+70℃				
	Humidity	20%-90%RH				
	Tc	100℃				
	Storage Temperature	-25℃~+80℃				
	Life time	＞50000h@Tc=85℃				
	Noise	≤20dB(A)@10cm				
Surface	Dimension	Φ50 x 22mm				
	material	PC				
Standards	Safety	GB19510. 1, GB19510. 14;IEC61347- 1, IEC61347-2- 13;EN62384				
	EMC	GB/T17743, GB17625. 1;EN55015, EN61000-3-2, EN61000-3-3, EN61547;EN61000-4-5				
	Energy Efficiency	Erp2.0 EU 2019/2020				

	RoHS	RoHS (2011/65/EU) (EU)2015/863
Note	1.All parameters not specially mentioned are measured at 230VAC input , full load and 25℃ of ambient temperature. 2.Ripple & Noise are measured at 20MHz of bandwidth by using a 300mm twisted pair-wire terminated with a 0.1uF & 47 uF parallel capacitor. 3.Switch and dimmer are not recommended to connect between this product output and luminaries. 4.Surge capability (L/N-Ground) was measured with a metal plate 2-3mm underlay. 5.All Eaglerise power supply are complied with EMI regulations. Since they are belong to component and will be installed inside system enclosure. When they are integrated into a system, the EMI characteristics of the system must be re-verified again.	

◆ Model list

Number	Model number	Output			
		Current (mA)	Voltage (VDC)	Voltage No load (VDC)	Power (W)
1	CS-22-350 SI	350	27-42	59	14.7
2	CS-22-400 SI	400			16.8
3	CS-22-450 SI	450			18.9
4	CS-22-500 SI	500			21
5	CS-22-550 SI	550	27-40		22

◆ Inrush Current

Ipeak	Twidth	B10	B16	B20	C10	C16	C20
12.1A	104μs	29pcs	47pcs	59pcs	29pcs	47pcs	59pcs

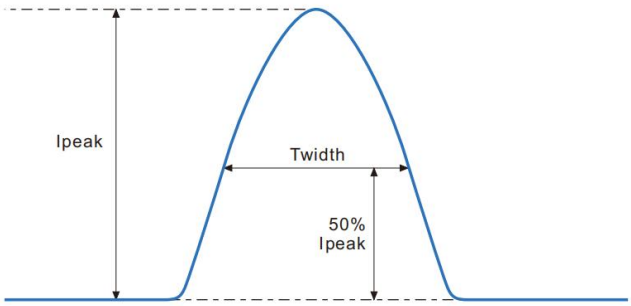

Remarks:
1.The number of drives mounted under different MCBs in the table is the maximum value. Please do not exceed this number during installation.
2.Different brands and models of miniature circuit breakers, the number of drives mounted will be slightly different.

◆ Wiring diagram

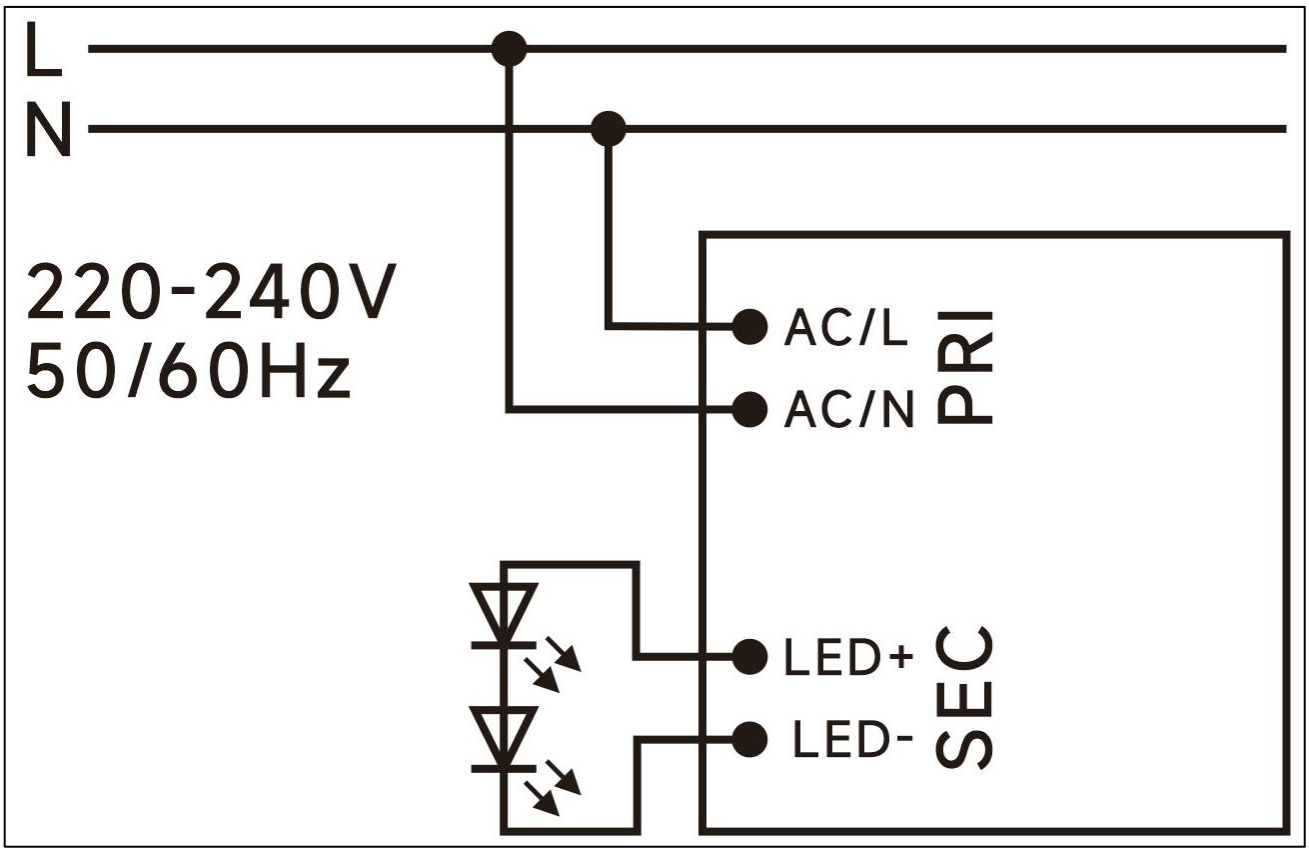

◆ 2D diagram

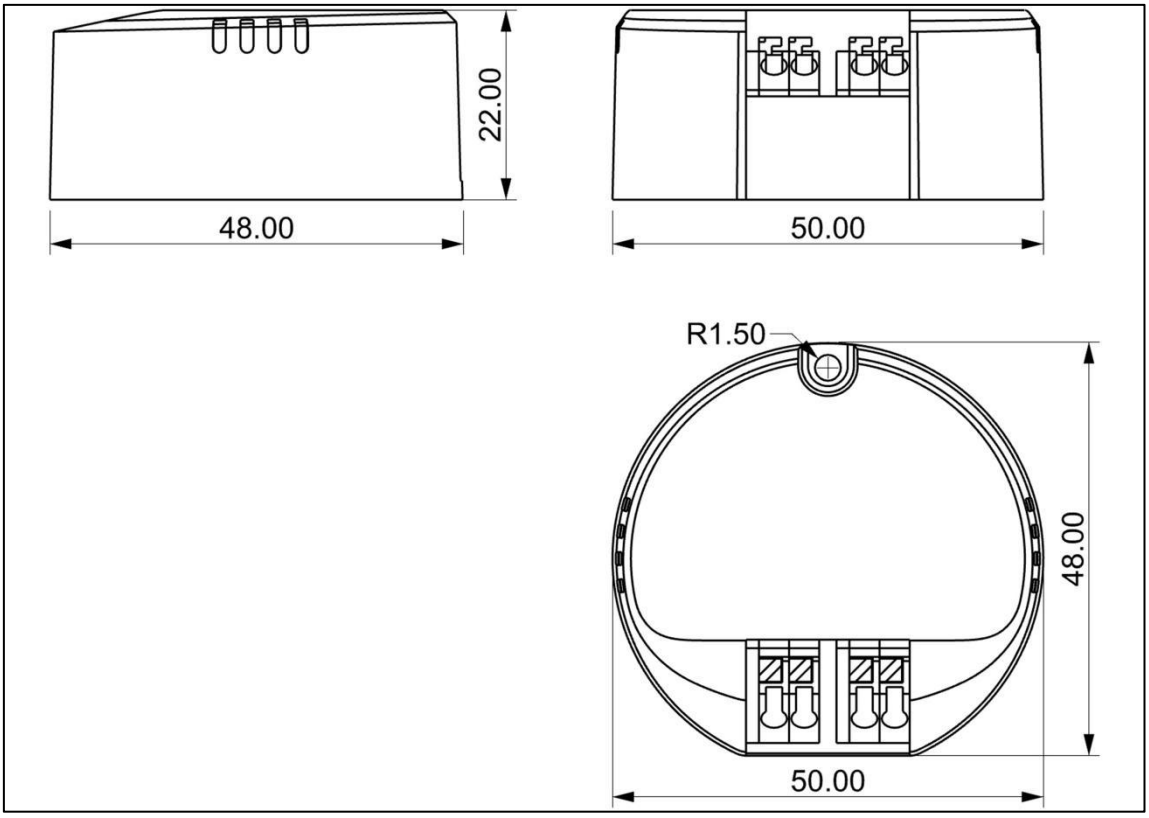

Terminal

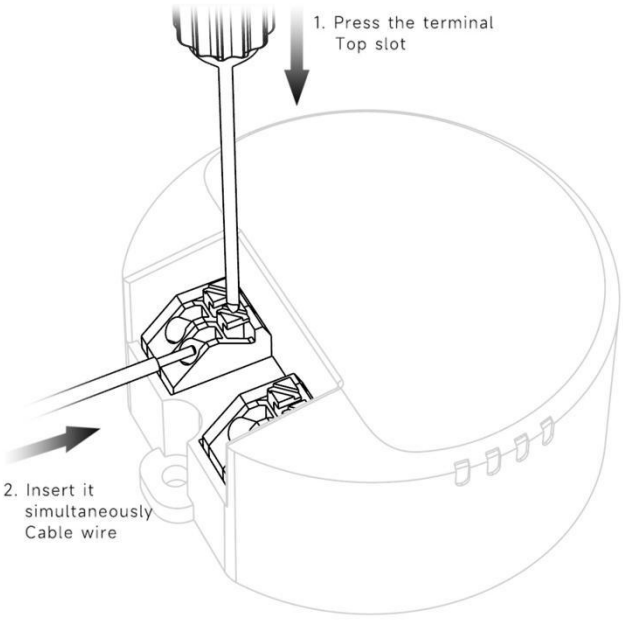

◆ Wiring & Connections

Specification item		Value （Unit ）
Input	Input wire cross-section	0.5...1.5 mm^2
	Input wire gauge.	16...20 AWG
	Input wire strip length	7...9mm
Output	Output wire cross-section	0.5...1.5 mm^2
	Output wire gauge.	16...20 AWG
	Output wire strip length	7...9mm

Note:Solid wire is risky to use on an angled terminal.Stranded wire is recommended for this kind of use.

◆ Curve for CS-22-XXX SI, Io=500mA

Lifetime vs. Temperature Curve

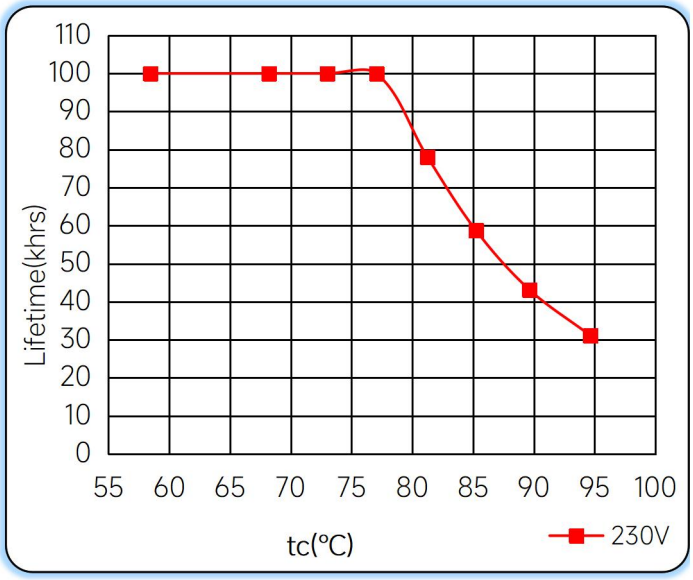

Efficiency vs. Load

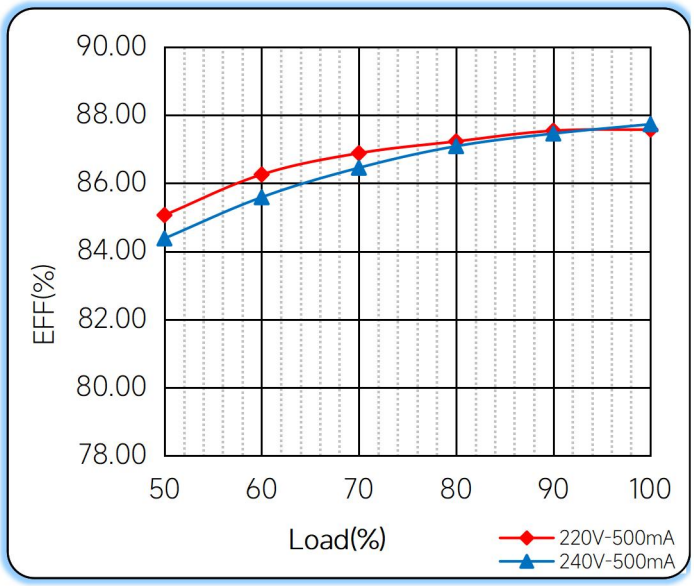

Power Factor Characteristics

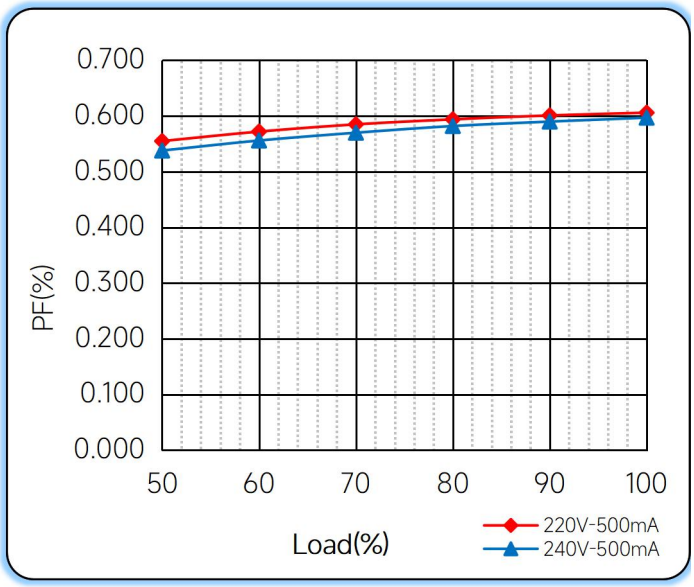

THD vs. Load

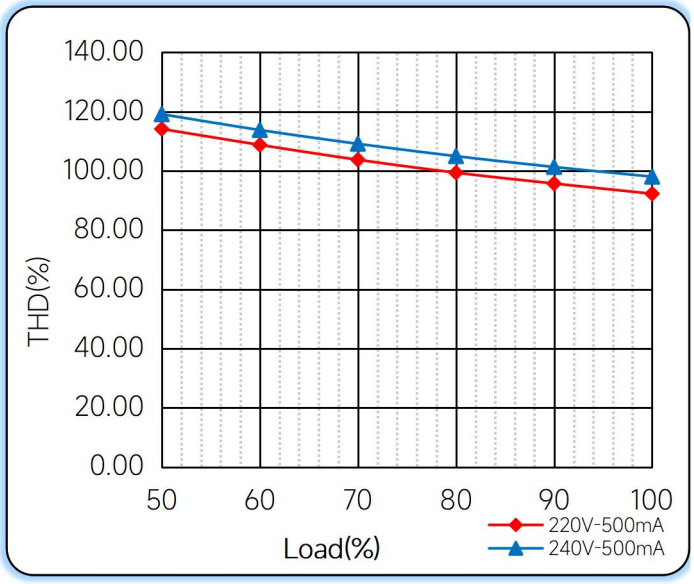

◆ Operating window

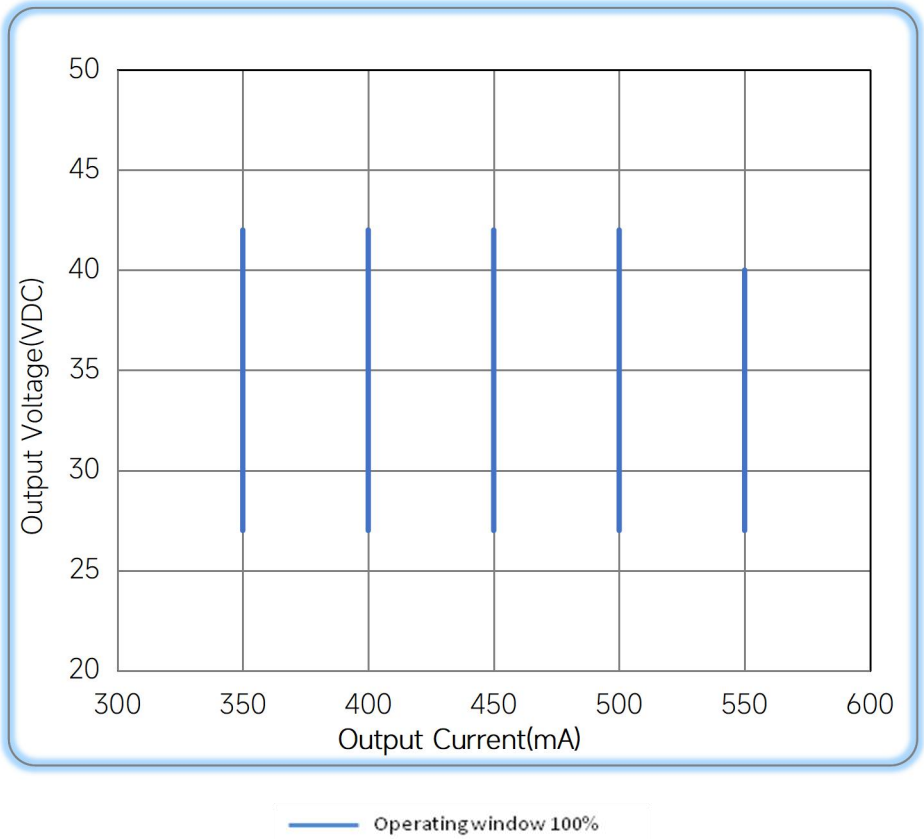

◆ Revision Updates

ITEM	BEFORE	AFTER	VERSION	DATE
Initial			A	2023/10/13
Life time	> 50000h@Tc=90°C	> 50000h@Tc=85°C	B	2023/12/18
Ta/TC	60°C/90°C	70°C/100°C	C	2024/04/10

Remark:The final interpretation of the contents of the specification belongs to Eaglerise Electric & Electronic (China) Co., Ltd.