24W Constant Current power supply

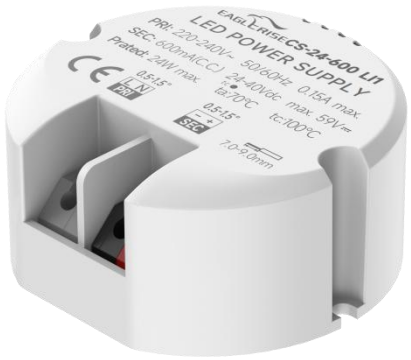

Features

- For luminaries of protection Class II, SELV, Built-in
- Input Voltage: 220-240VAC
- Protections: SCP/OLP/OVP/OTP
- Power Factor: 0.95
- Efficiency: 88%
- 5 years warranty
- IP20

Applications

- LED panel、LED ceiling light

■**Approve**

CE CB EAC CCC SELV

◆ Description

CS-24-XXX LI1 is a 24W constant current LED driver with 450 to 600mA output current a forward voltage range from 24 to 42 Vdc. With it's compact dimensions from Φ56x25.5mm. It is easy to integrate in LED Panel, spot and ceiling lights product. To ensure trouble-free operation, protection is provided against output short circuit and over Load.

◆ Model code

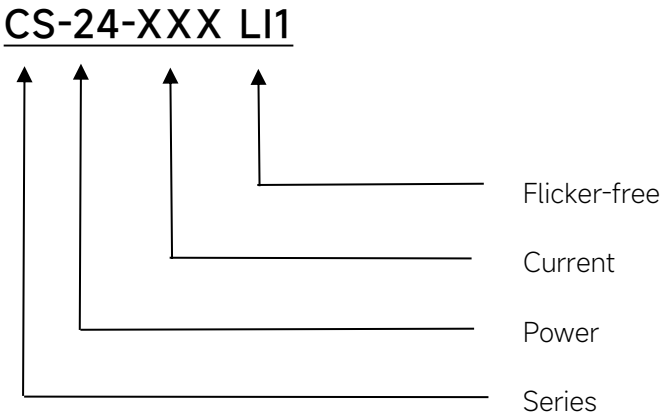

◆ Specification

Output	Constant Current (mA)	450	500	550	600
	Voltage Range(VDC)	24-42			24-40
	Unload voltage Max.	59VDC			
	Current Accuracy	±5%			
	Output HF current ripple(≥1KHz)	±5%			
	Output LF current ripple(≤120Hz)	±5%			
	SVM	≤0.4			
	Pst	≤1			
	Efficiency(Typ.)	87%		88%	
Input	Rated input voltage	220-240VAC			
	Range of input voltage	198-264VAC			
	Maximum voltage	300VAC@1 h maximum,unit might not operate in this abnormal condition			
	Frequency(Hz)	50/60 Hz			
	Displacement factor	≥0.9			
	Power Factor	0.95			
	Input Current max (mA)	0.15A			
	Start-up time	＜0.5S			
	No Load Power	≤0.5W			
	THD (Typ.)	<10%			
Protection	Over Load Protection	103-140%			
		YES/Auto Resume			
	Over Voltage Protection	59VDC			
		YES/Auto Resume			
	Short circuit Protection	YES/Auto Resume			
capability	Surge capability (L-N)	2KV			
Environment	Operating Temperature	-20℃~+70℃			
	Humidity	20%-90%RH			
	Tc	100℃			
	Storage Temperature	-25℃~+80℃			
	Life time	＞50000h@Tc=85℃			
	Noise	≤25dB(A)@10cm			
Surface	Dimension	Φ56 x25.5mm			
	material	PC			
Standards	Safety	GB19510. 1, GB19510. 14;IEC61347- 1, IEC61347-2- 13;EN62384			
	EMC	GB/T17743, GB17625. 1;EN55015, EN61000-3-2, EN61000-3-3, EN61547;EN61000-4-5			
	Energy Efficiency	Erp2.0 EU 2019/2020			
	RoHS	RoHS (2011/65/EU) (EU)2015/863			

Note	1.All parameters not specially mentioned are measured at 230VAC input , full load and 25℃ of ambient temperature. 2.Ripple & Noise are measured at 20MHz of bandwidth by using a 300mm twisted pair-wire terminated with a 0.1uF & 47 uF parallel capacitor. 3.Switch and dimmer are not recommended to connect between this product output and luminaries. 4.The over-temperature protection of the product is provided by the IC. 5.All Eaglerise power supply are complied with EMI regulations. Since they are belong to component and will be installed inside system enclosure. When they are integrated into a system, the EMI characteristics of the system must be re-verified again.

◆ Model list

Number	Model number	Output			
		Current (mA)	Voltage (VDC)	Voltage No load (VDC)	Power (W)
1	CS-24-450 LI1	450	24-42	59	18.9
2	CS-24-500 LI1	500			21
3	CS-24-550 LI1	550			23.1
4	CS-24-600 LI1	600	24-40		24

◆ Inrush Current

I_{peak}	T_{width}	B10	B16	B20	C10	C16	C20
18.9A	**126μs**	35pcs	56pcs	70pcs	53pcs	85pcs	106pcs

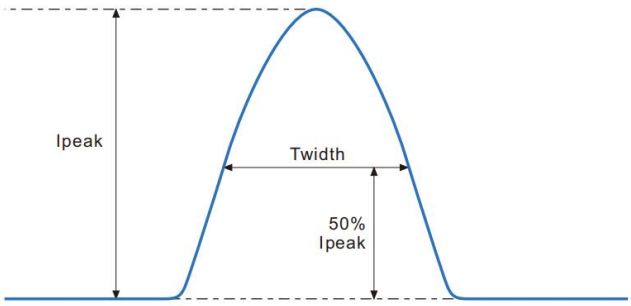

Remarks:
1.The number of drives mounted under different MCBs in the table is the maximum value. Please do not exceed this number during installation.
2.Different brands and models of miniature circuit breakers, the number of drives mounted will be slightly different.

◆ Wiring diagram

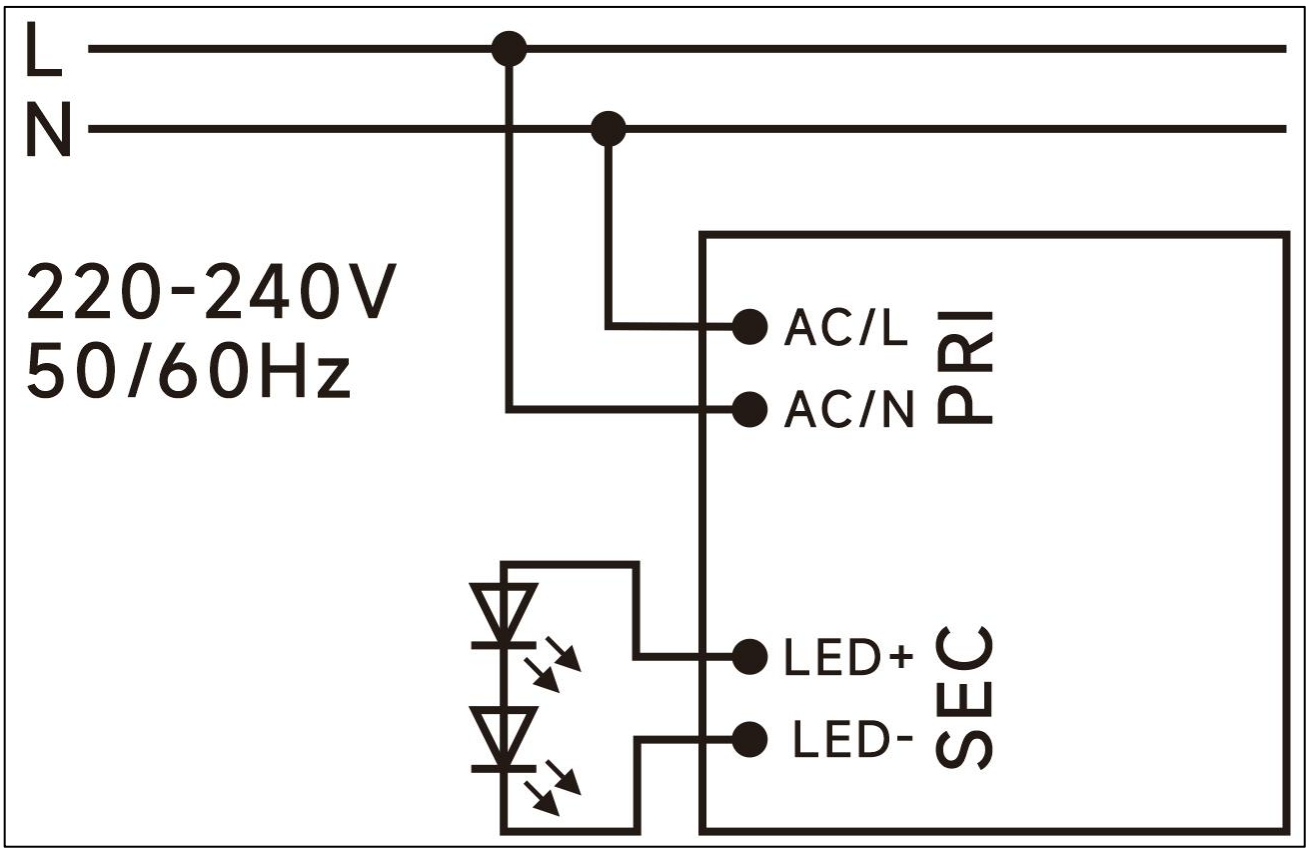

◆ 2D diagram

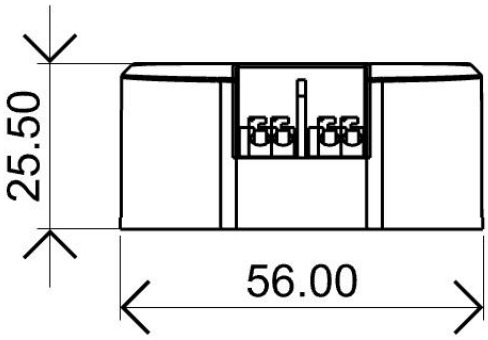

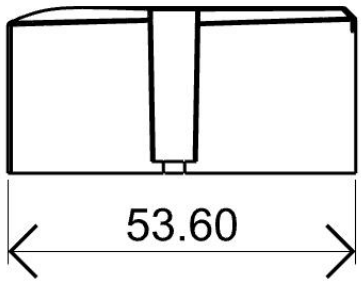

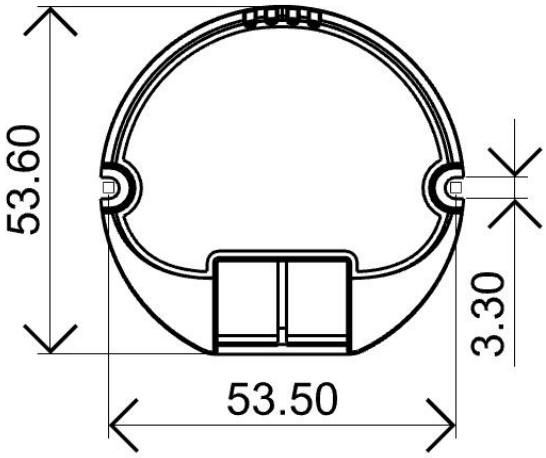

Terminal

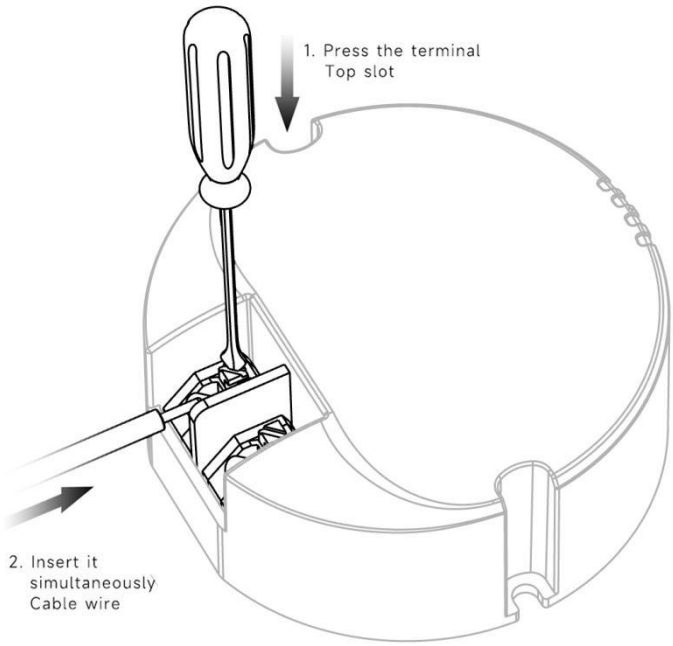

◆ Wiring & Connections

Specification item		Value （Unit ）
Input	Input wire cross-section	0.5...1.5 mm^2
	Input wire gauge.	16...20 AWG
	Input wire strip length	7...9mm
Output	Output wire cross-section	0.5...1.5 mm^2
	Output wire gauge.	16...20 AWG
	Output wire strip length	7...9mm

Note:Solid wire is risky to use on an angled terminal.Stranded wire is recommended for this kind of use.

◆ Curve for CS-24-600 LI1, Io=600mA

Lifetime vs. Temperature Curve

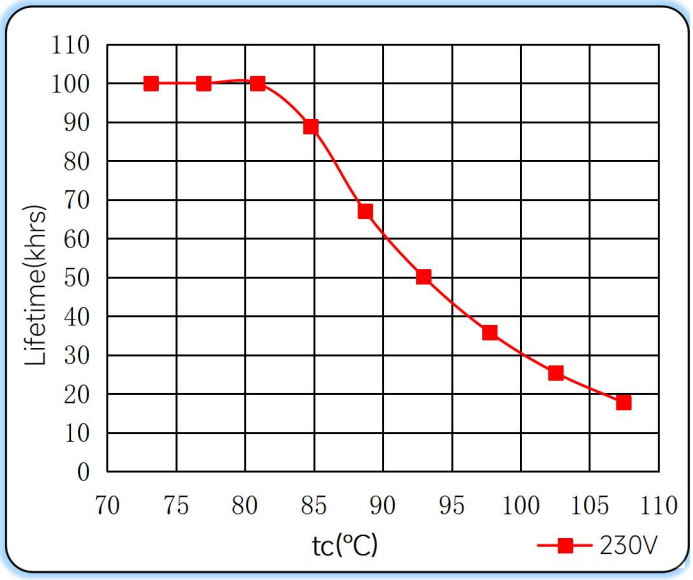

Efficiency vs. Load

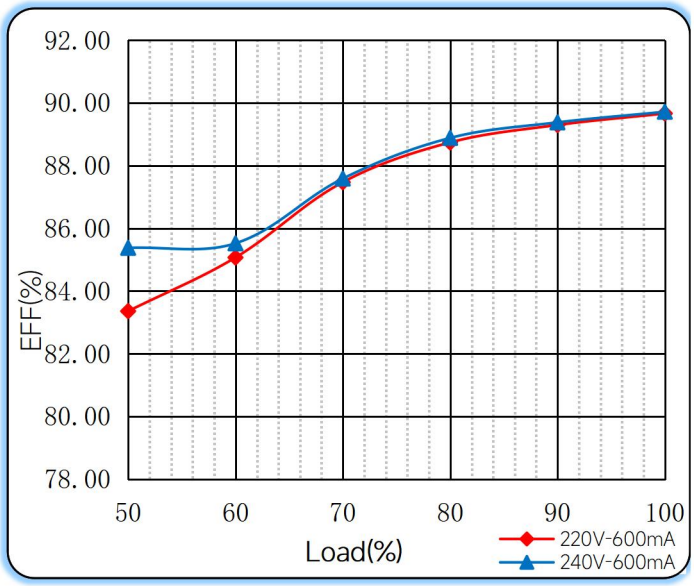

Power Factor Characteristics

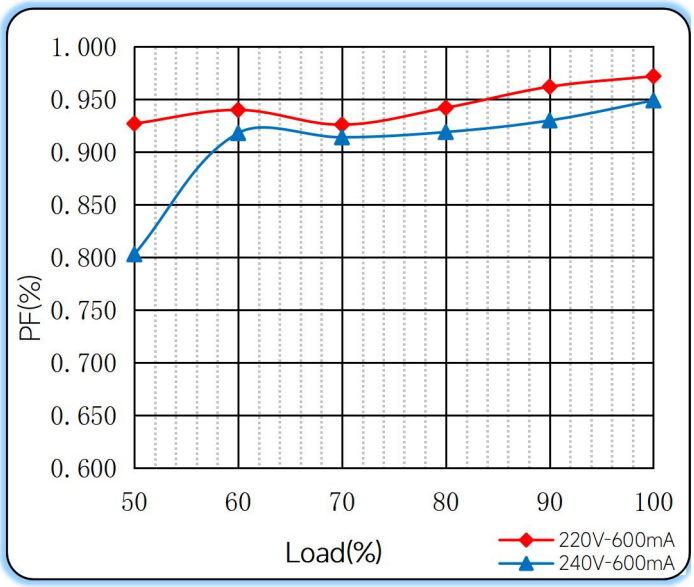

THD vs. Load

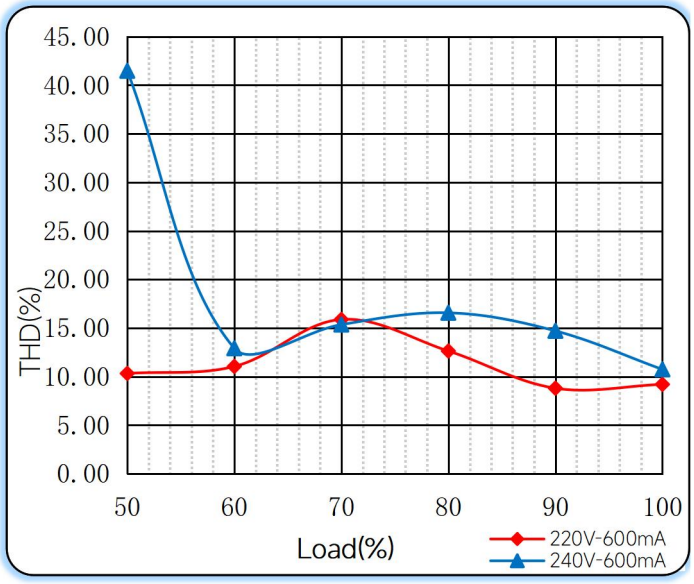

◆ Operating window

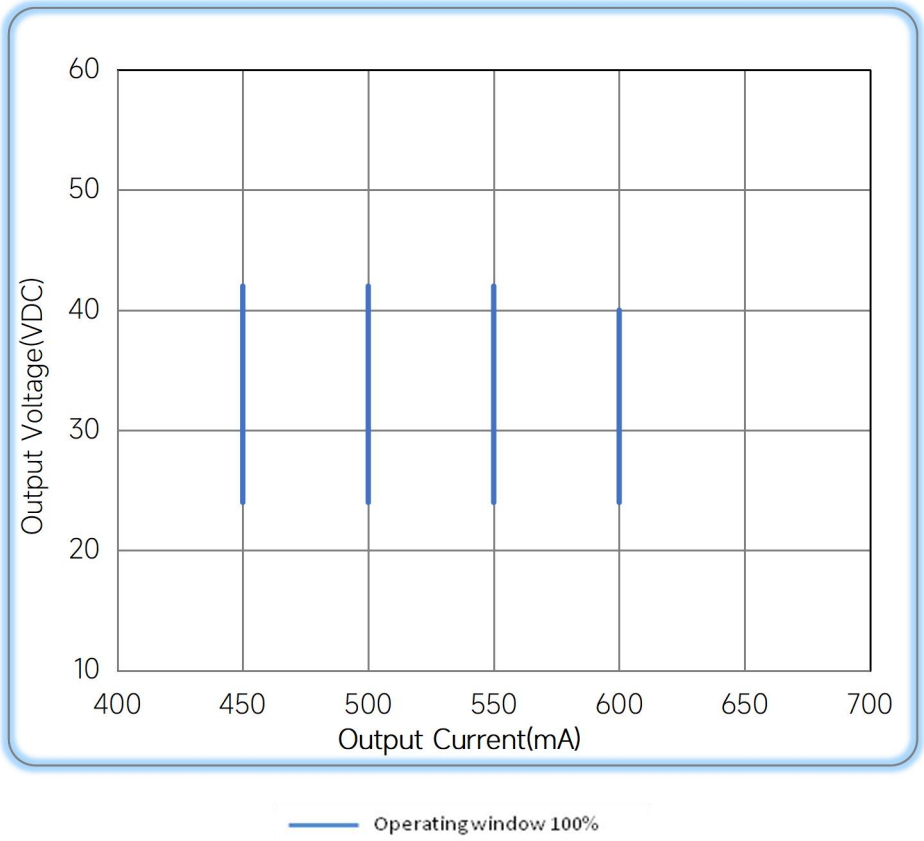

◆ Revision Updates

ITEM	BEFORE	AFTER	VERSION	DATE
Initial			A	2024/06/05

Remark:The final interpretation of the contents of the specification belongs to Eaglerise Electric & Electronic (China) Co., Ltd.