42W Constant Current power supply

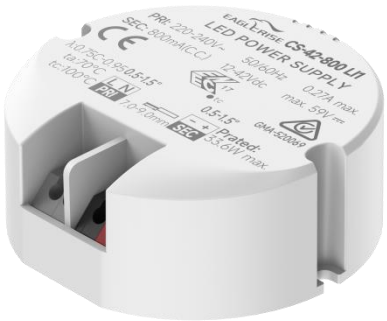

Features

- For luminaries of protection Class II, SELV, Built-in
- Input Voltage: 220-240VAC
- Protections: SCP/OLP/OVP/OTP
- Power Factor: 0.95
- Efficiency: 90%
- 5 years warranty
- IP20

Applications

- LED panel、LED ceiling light

■Approve

CE CB EAC CCC SELV

◆ Description

CS-42-XXX LI1 is a 42W constant current LED driver with 800 to 1050mA output current and a forward voltage range from 24 to 42 Vdc. With it's compact dimensions from Φ65x25mm. It is easy to integrate in LED Panel, spot and ceiling lights product. To ensure trouble-free operation, protection is provided against output short circuit and over Load.

◆ Model code

CS-42-XXX LI1

- Flicker-free
- Current
- Power
- Series

◆ Specification

Output	Constant Current (mA)	800	850	900	950	1000	1050
	Voltage Range(VDC)	24-42					24-40
	Unload voltage Max.	59VDC					
	Current Accuracy	±5%					
	Output HF current ripple(≥1KHz)	±5%					
	Output LF current ripple(≤120Hz)	±5%					
	SVM	≤0.4					
	Pst	≤1					
	Efficiency(Typ.)	90%					
Input	Rated input voltage	220-240VAC					
	Range of input voltage	198-264VAC					
	Maximum voltage	300VAC@1 h maximum,unit might not operate in this abnormal condition					
	Frequency(Hz)	50/60 Hz					
	Displacement factor	≥0.95					
	Power Factor	0.95					
	Input Current max (mA)	0.27A					
	Start-up time	＜0.5S					
	No Load Power	≤0.5W					
	THD (Typ.)	<10%					
Protection	Over Load Protection	103-140%					
		YES/Auto Resume					
	Over Voltage Protection	＞59VDC					
		YES/Auto Resume					
	Short circuit Protection	YES/Auto Resume					
capability	Surge capability (L-N)	2KV					
	Surge capability (L/N-Ground)	NA					
Environment	Operating Temperature	-20℃~+70℃					
	Humidity	20%-90%RH					
	Tc	100℃					
	Storage Temperature	-25℃~+80℃					
	Life time	＞50000h@Tc=85℃					
	Noise	≤25dB(A)@10cm					
Surface	Dimension	Φ65 x25mm					
	material	PC					
Standards	Safety	GB19510. 1, GB19510. 14;IEC61347- 1, IEC61347-2- 13;EN62384					
	EMC	GB/T17743, GB17625. 1;EN55015, EN61000-3-2, EN61000-3-3, EN61547;EN61000-4-5					
	Energy Efficiency	Erp2.0 EU 2019/2020					

	RoHS	RoHS (2011/65/EU) (EU)2015/863
Note	1.All parameters not specially mentioned are measured at 230VAC input , full load and 25℃ of ambient temperature. 2.Ripple & Noise are measured at 20MHz of bandwidth by using a 300mm twisted pair-wire terminated with a 0.1uF & 47 uF parallel capacitor. 3.Switch and dimmer are not recommended to connect between this product output and luminaries. 4.The over-temperature protection of the product is provided by the IC. 5.All Eaglerise power supply are complied with EMI regulations. Since they are belong to component and will be installed inside system enclosure. When they are integrated into a system, the EMI characteristics of the system must be re-verified again.	

◆ Model list

Number	Model number	Output			
		Current (mA)	Voltage (VDC)	Voltage No load (VDC)	Power (W)
1	CS-42-800 LI1	800	24-42	59VDC	33.6
2	CS-42-850 LI1	850			35.7
3	CS-42-900 LI1	900			37.8
4	CS-42-950 LI1	950			39.9
5	CS-42-1000 LI1	1000			42
6	CS-42-1050 LI1	1050	24-40		42

◆ Inrush Current

I_{peak}	T_{width}	B10	B16	B20	C10	C16	C20
24.2A	**144μs**	23pcs	38pcs	47pcs	29pcs	47pcs	59pcs

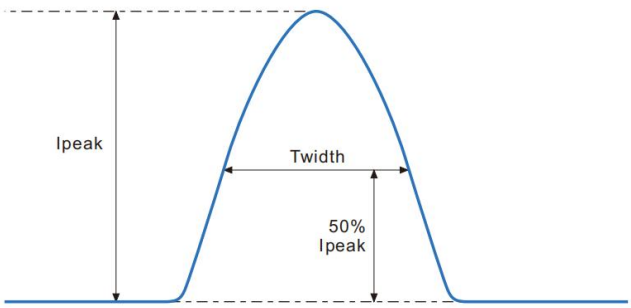

Remarks:
1.The number of drives mounted under different MCBs in the table is the maximum value. Please do not exceed this number during installation.
2.Different brands and models of miniature circuit breakers, the number of drives mounted will be slightly different.

◆ Wiring diagram

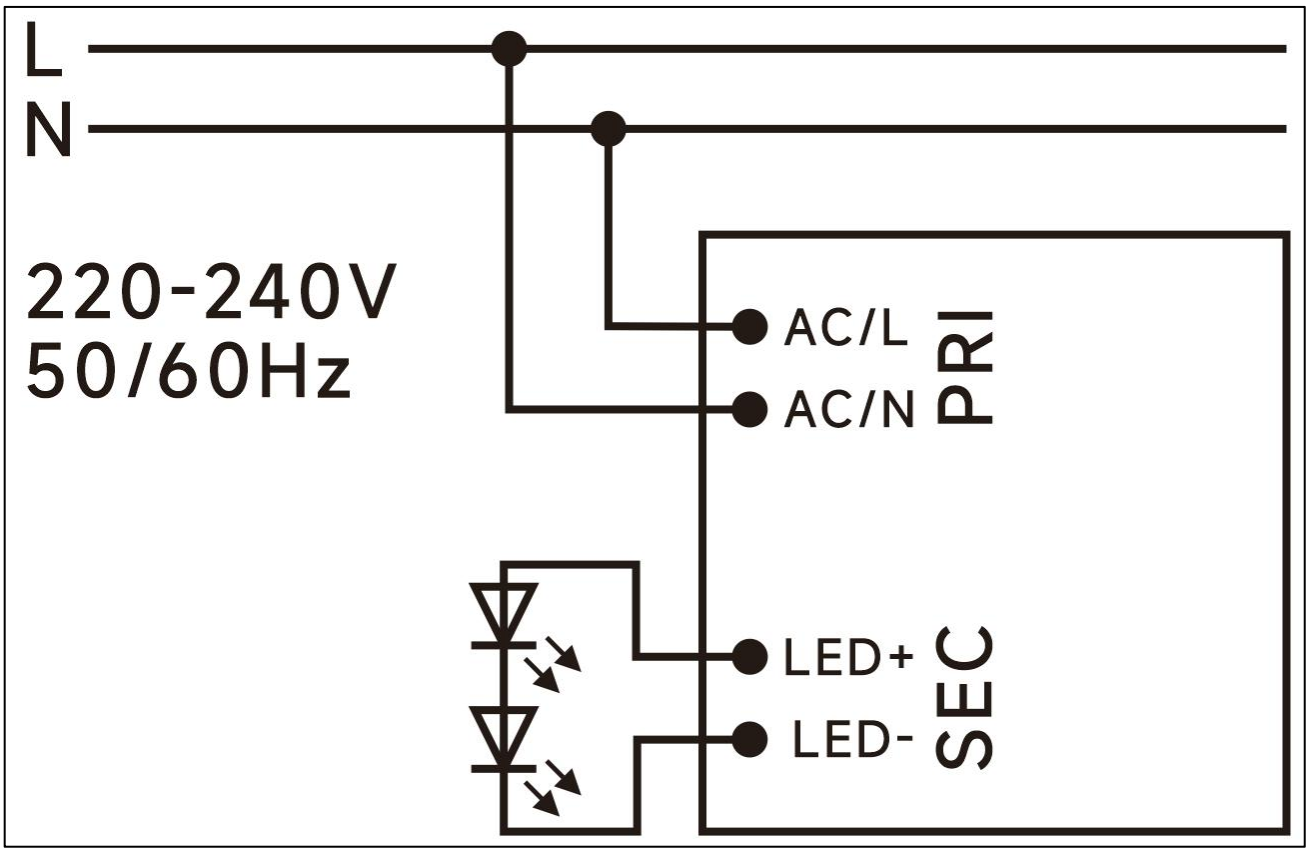

◆ 2D diagram

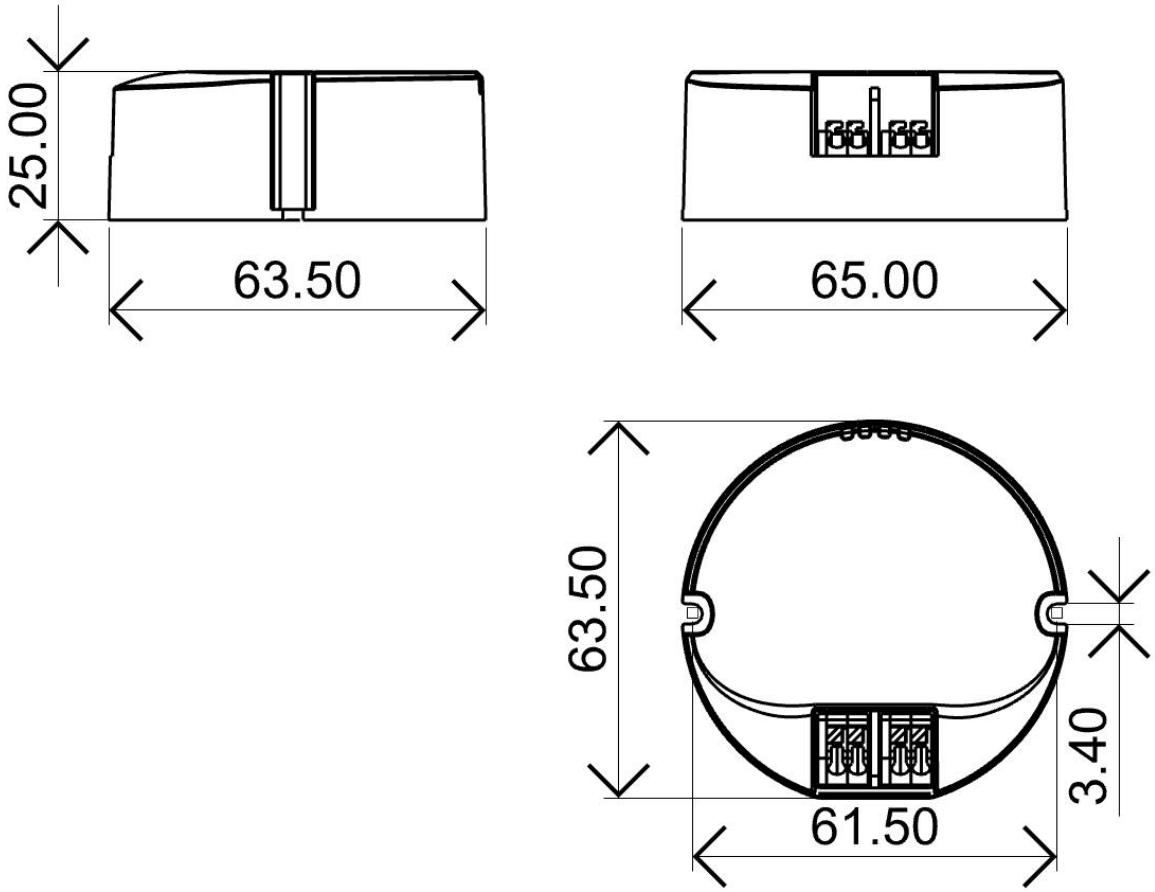

Terminal

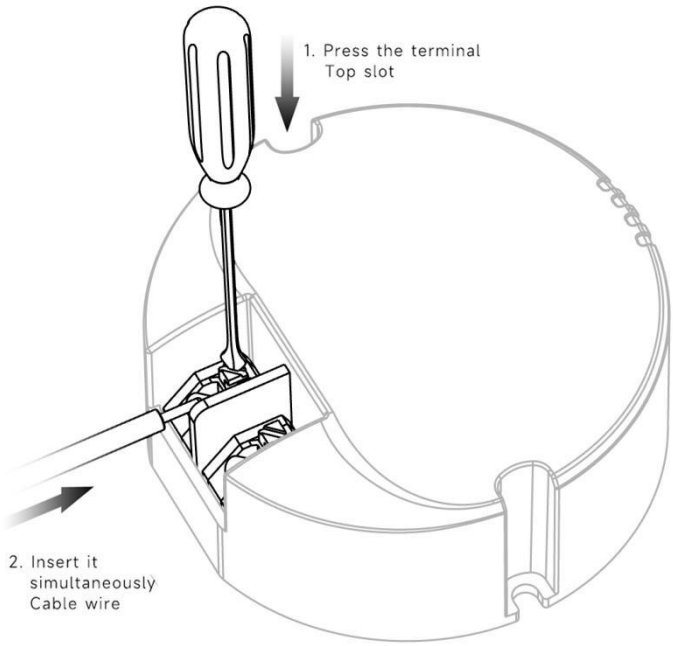

◆ Wiring & Connections

Specification item		Value （Unit ）
Input	Input wire cross-section	0.5...1.5 mm^2
	Input wire gauge.	16...20 AWG
	Input wire strip length	7...9mm
Output	Output wire cross-section	0.5...1.5 mm^2
	Output wire gauge.	16...20 AWG
	Output wire strip length	7...9mm

Note:Solid wire is risky to use on an angled terminal.Stranded wire is recommended for this kind of use.

◆ Curve for CS-42-800 LI1, Io=800mA

Lifetime vs. Temperature Curve

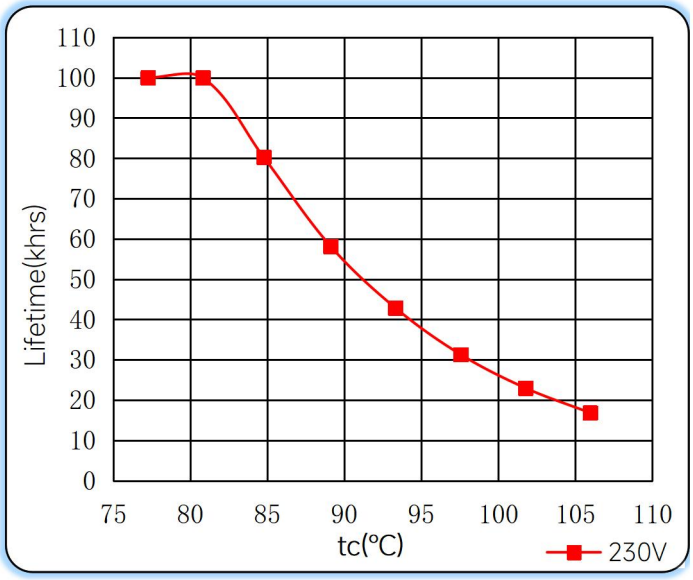

Efficiency vs. Load

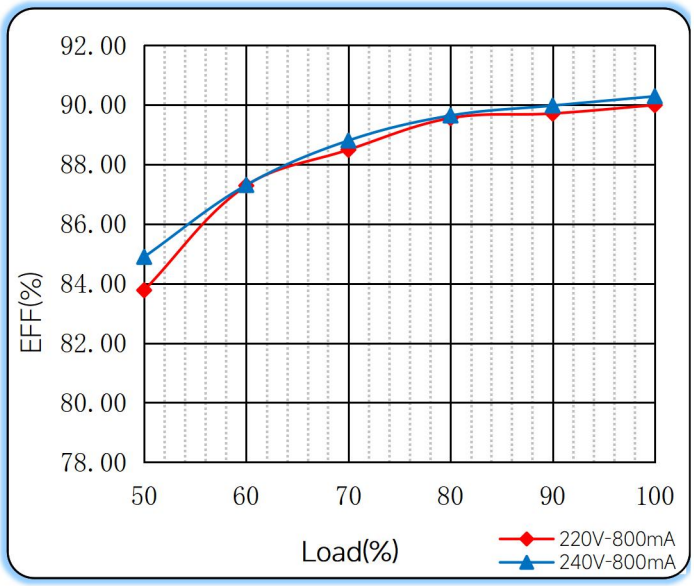

Power Factor Characteristics

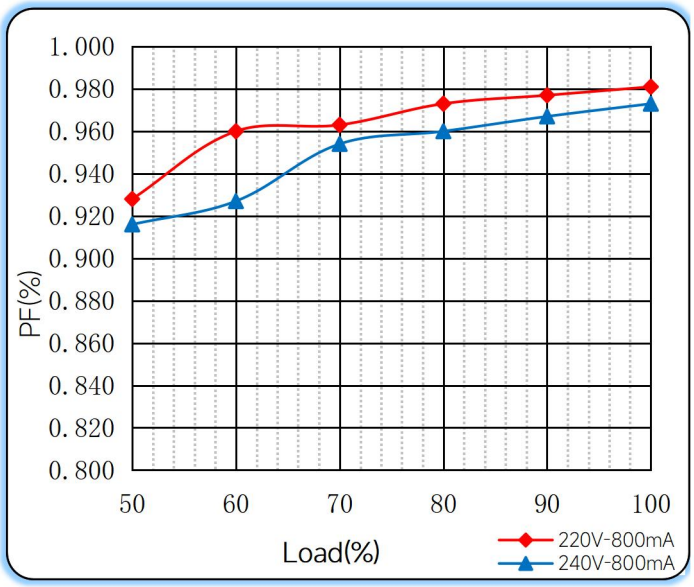

THD vs. Load

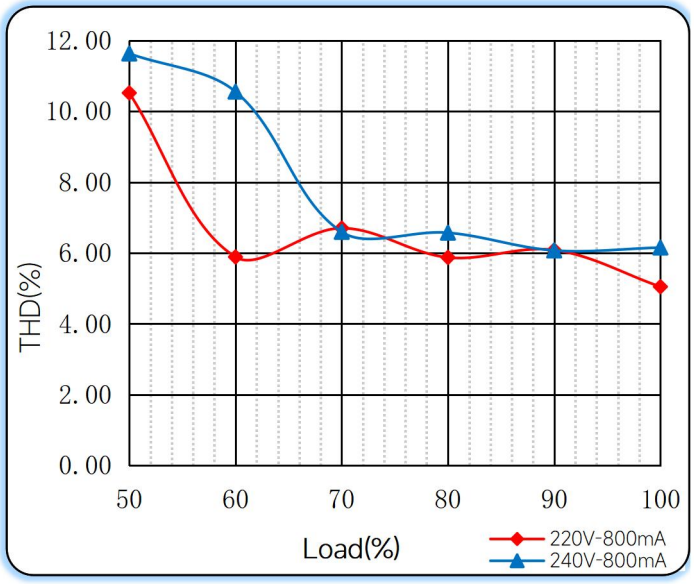

◆ Operating window

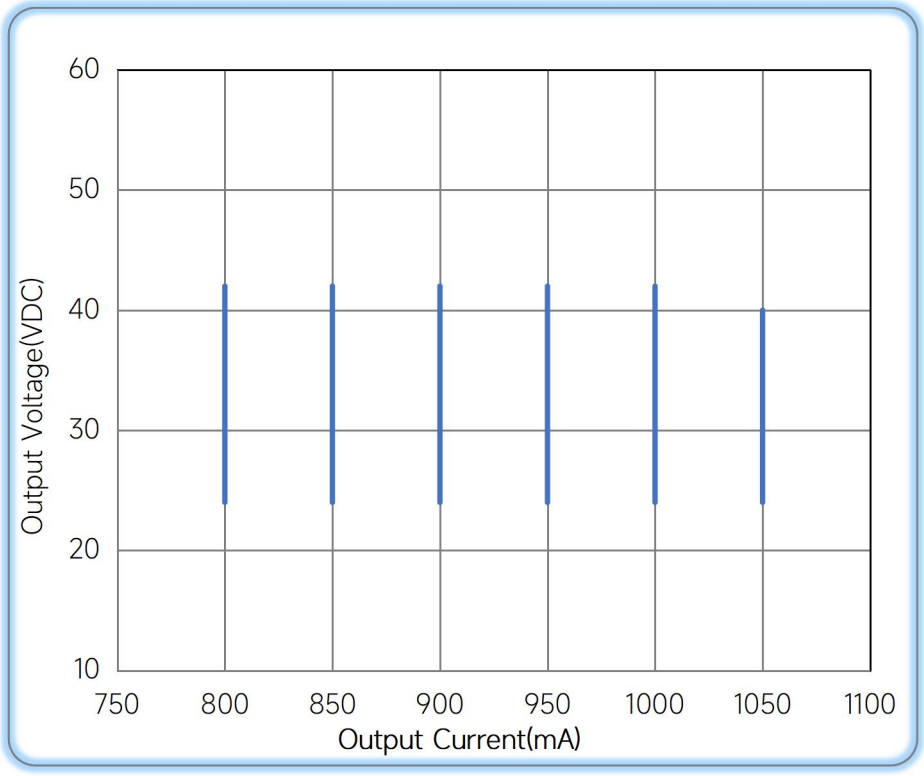

Operating window 100%

◆ Revision Updates

ITEM	BEFORE	AFTER	VERSION	DATE
Initial			A	2024/06/05
Power Factor	≥0.95	0.95	B	2024/07/26

Remark:The final interpretation of the contents of the specification belongs to Eaglerise Electric & Electronic (China) Co., Ltd.