12W Constant Current power supply

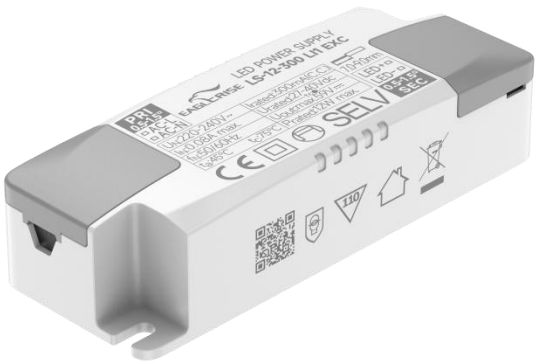

Features

- For luminaries of protection Class II, SELV, independent
- Input Voltage 220-240VAC
- Protections: SCP/OLP/OVP/OTP
- Power Factor :0.95
- Efficiency: 81%
- 5 years warranty

Applications

- LED panel、LED down light LED spot light

■Approve

CE CB EAC CCC SELV

◆ Description

LS-12-XXX LI1 EXC is a 12W constant current LED driver that operates from 198-264Vac input with 250 to 300mA output current. With it's compact dimensions from 92 x 36 x 25mm it is easy to integrate in LED Panel, spot, down lights. To ensure trouble-free operation, protection is provided against output short circuit and over Load.

◆ Model code

LS-12-XXX LI1 EXC

- Flicker-free
- Current
- Power
- Series

◆ Specification

Output	Constant Current (mA)	250	280	300
	Voltage Range(VDC)	27-42		27-40
	Unload voltage Max.(VDC))	59V		
	Current Accuracy	±5%		
	Output HF current ripple(≥1KHz)	±5%		
	Output LF current ripple(≤120Hz)	±3%		
	SVM	≤0.4		
	P_{st}	≤1		
	Efficiency(Typ.)	81%		
Input	Rated input voltage	220-240VAC		
	Range of input voltage	198-264VAC		
	Maximum voltage	300VAC@1 h maximum,unit might not operate in this abnormal condition		
	Frequency(Hz)	50/60 Hz		
	Displacement factor(Typ.)	≥0.95@Full load 230VAC		
	Power Factor	0.95@Full load 230VAC		
	Input Current max	0.07A	0.075A	0.08A
	Start-up time	< 0.5S		
	No Load Power	≤0.5W		
	THD (Typ.)	< 20%		
Protection	Over Load Protection	103-130%		
		YES/Auto Resume		
	Over Voltage Protection	59VDC		
		YES/Auto Resume		
	Short circuit Protection	YES/Auto Resume		
capability	Surge capability (L-N)	1KV		
	Surge capability (L/N-Ground)	NA		
Environment	Operating Temperature	-20℃~+45℃		
	Humidity	10%-90%RH		
	Tc	75℃		
	Storage Temperature	-25℃~+60℃		
	Life time	> 50000h@Tc=75℃		
	Noise	≤20dB(A)@10cm		
Surface	Dimension	92x36x25mm		
	material	PC		
Standards	Safety	GB19510. 1, GB19510. 14;IEC61347- 1, IEC61347-2- 13;EN61347- 1, EN61347-2-13;EN62384		

	EMC	GB/T17743, GB17625. 1;EN55015, EN61000-3-2, EN61000-3-3, EN61547;EN61000-4-5;EN61000-4-2,3,4,5,6,8,11
	Energy Efficiency	Erp2.0 EU 2019/2020
	RoHS	RoHS (2011/65/EU) (EU)2015/863
Note	1.All parameters not specially mentioned are measured at 230VAC input , full load and 25℃ of ambient temperature. 2.Ripple & Noise are measured at 20MHz of bandwidth by using a 300mm twisted pair-wire terminated with a 0.1uF & 47 uF parallel capacitor. 3.Switch and dimmer are not recommended to connect between this product output and luminaries. 4.The over-temperature protection of the product is provided by the IC. 5.All Eaglerise power supply are complied with EMI regulations. Since they are belong to component and will be installed inside system enclosure. When they are integrated into a system, the EMI characteristics of the system must be re-verified again.	

◆ Model list

Number	Model number	Input			Output			
		Voltage (VAC)	Current (A)	Frequency (Hz)	Current (mA)	Voltage (VDC)	Voltage No load (VDC)	Power (W)
1	LS-12-250 LI1 EXC	220-240	0.07	50/60	250	27-42	59	10.5
2	LS-12-280 LI1 EXC		0.075		280			11.8
3	LS-12-300 LI1 EXC		0.08		300	27-40		12

◆ Inrush Current

I^{peak}	T_{width}	B10	B16	B20	C10	C16	C20
7.04A	**122μs**	100pcs	157pcs	196pcs	100pcs	160pcs	200pcs

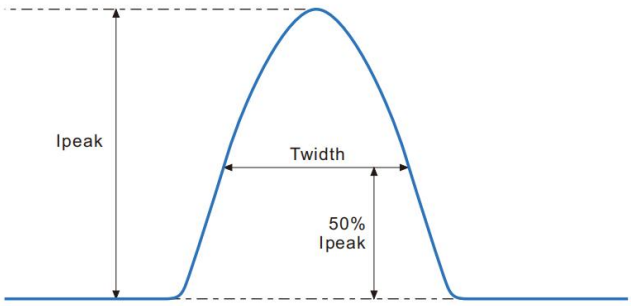

Remarks:
1.The number of drives mounted under different MCBs in the table is the maximum value. Please do not exceed this number during installation.
2.Different brands and models of miniature circuit breakers, the number of drives mounted will be slightly different.

◆ Wiring diagram

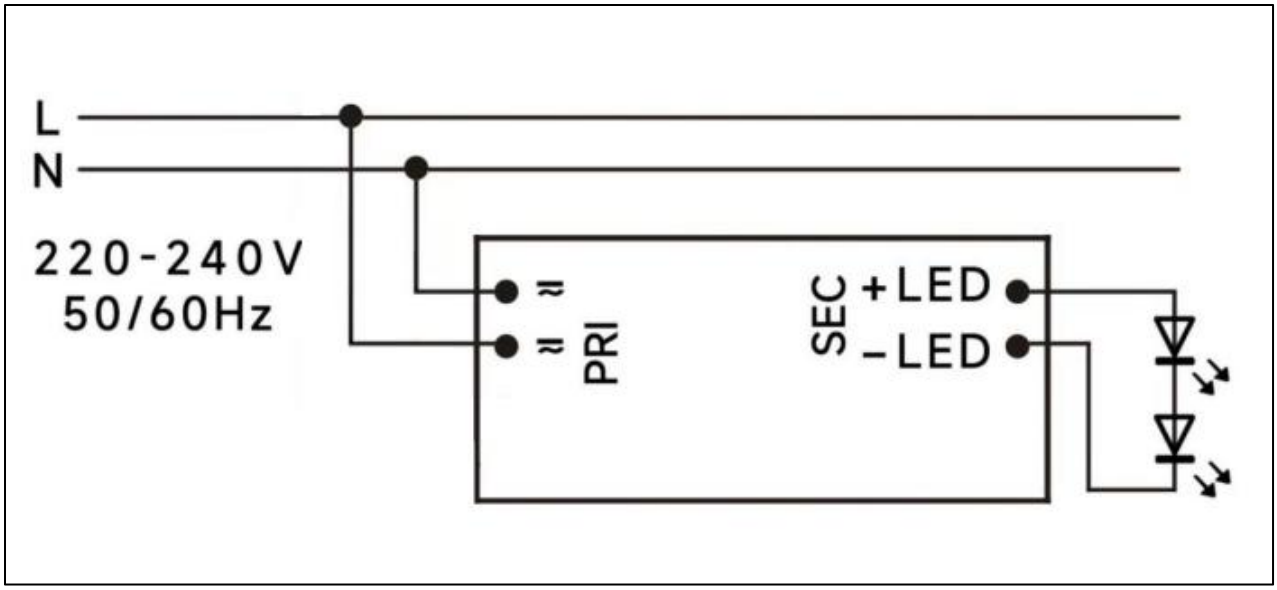

◆ 2D diagram

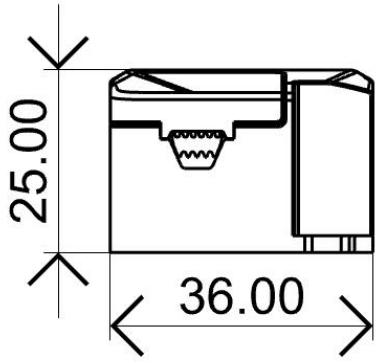
25.00
36.00

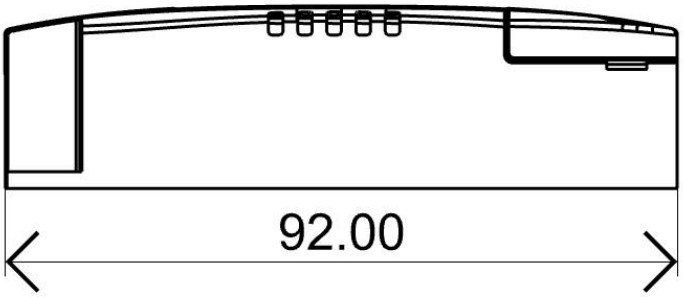
92.00

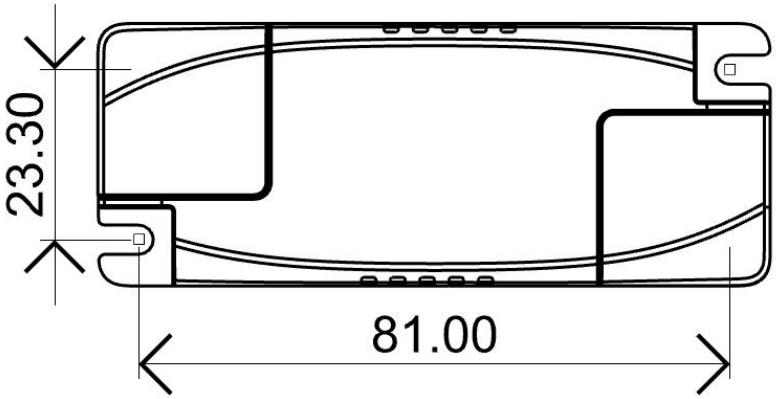
23.30
81.00

Terminal

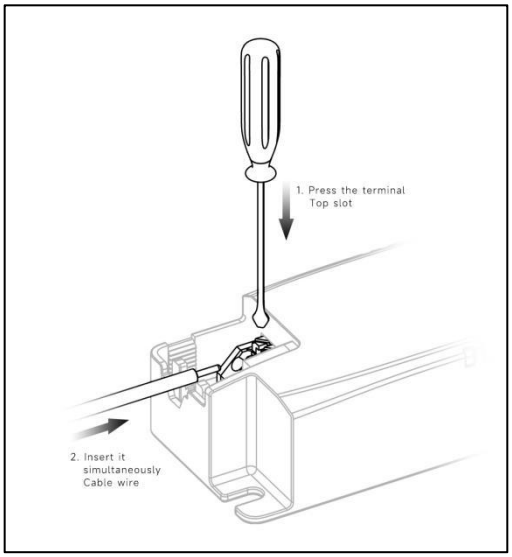
1. Press the terminal
Top slot
2. Insert it
simultaneously
Cable wire

◆ Wiring & Connections

Specification item		Value （Unit ）
Input	Input wire cross-section	0.5...1.5 mm^2
	Input wire gauge.	16...20 AWG
	Input wire strip length	7...9mm
Output	Output wire cross-section	0.5...1.5 mm^2
	Output wire gauge.	16...20 AWG
	Output wire strip length	7...9mm

◆ Recommended wire

Wire cross-section	Wire type
2*0.5mm^2	H03VVH2-F 2core
2*0.75mm^2	H03VVH2-F 2core
1.5mm^2	CCC 08(RV-90)
16AWG(1.25mm^2)	UL1015

Note:Solid wire is risky to use on an angled terminal.Stranded wire is recommended for this kind of use.

◆ Curve for LS-12-300 LI1 EXC, Io=300mA

Lifetime vs. Temperature Curve

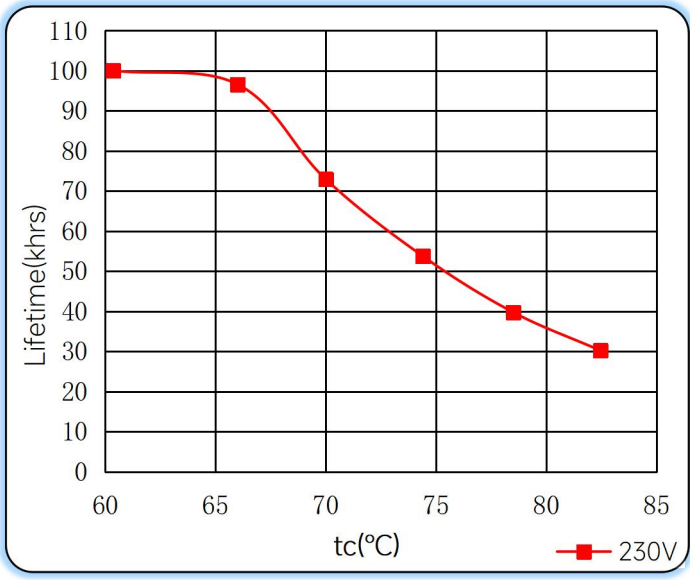

Efficiency vs. Load

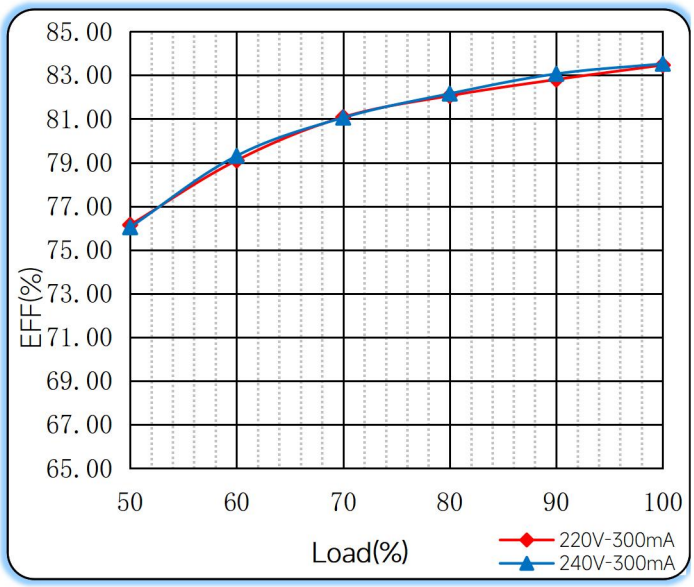

Power Factor Characteristics

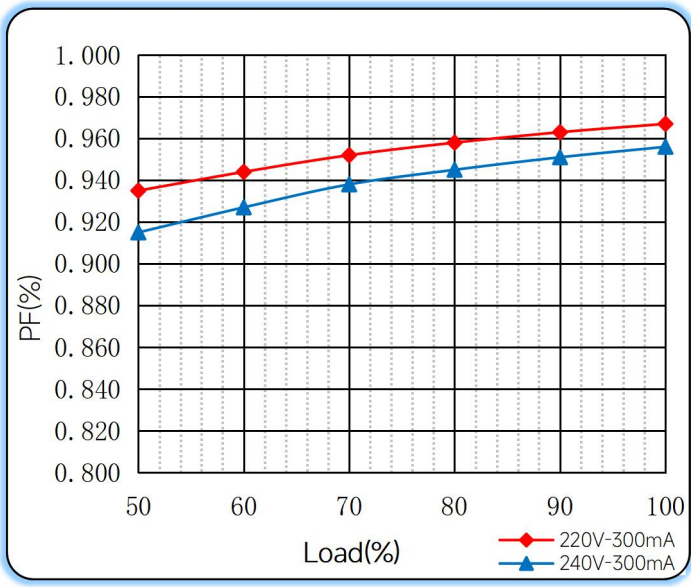

THD vs. Load

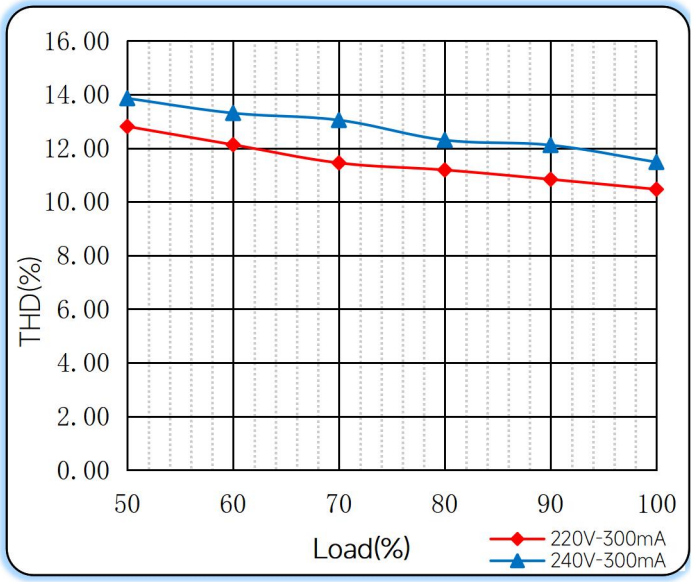

◆ Operating window

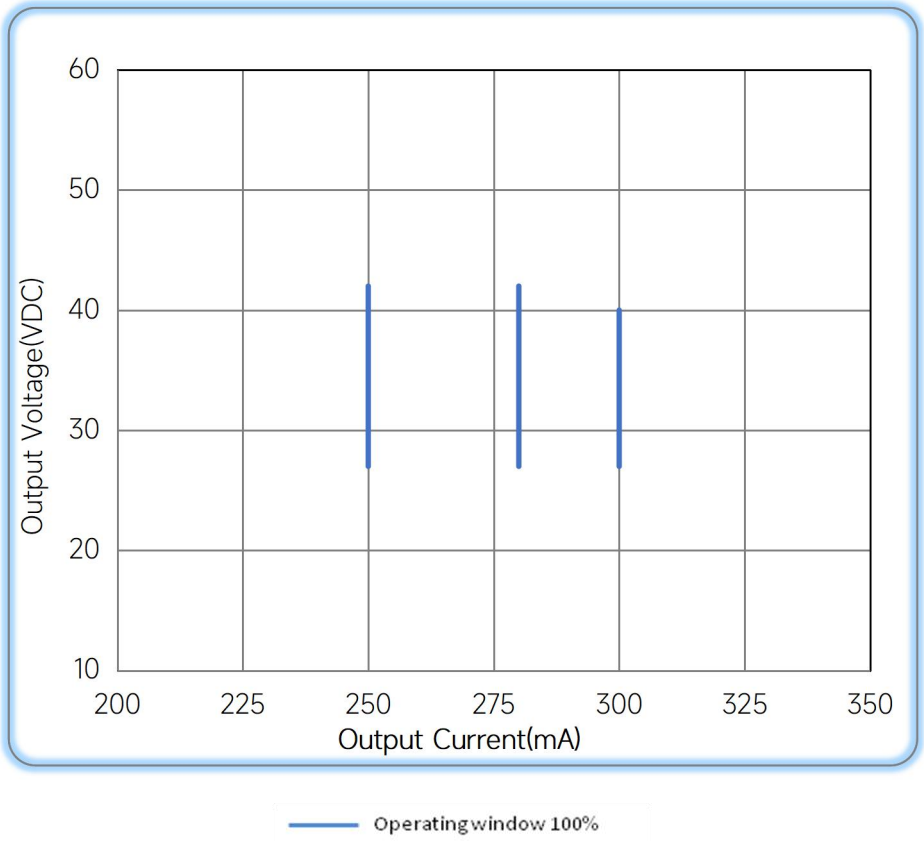

◆ Revision Updates

ITEM	BEFORE	AFTER	VERSION	DATE
Initial			A	2024/01/09

Remark:The final interpretation of the contents of the specification belongs to Eaglerise Electric & Electronic (China) Co., Ltd.