12W Constant Current power supply

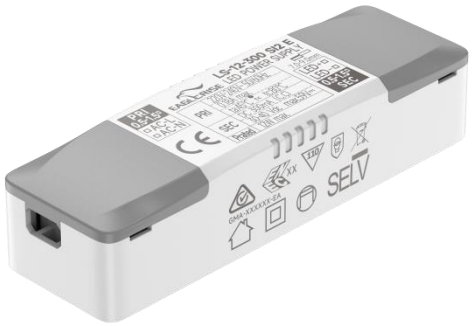

■Approve

Features

- Class II，SELV，Independent
- Input Voltage: 220-240VAC
- Protections：SCP/OLP/OVP/OTP
- Power Factor：0.6C
- Efficiency：≥82%
- 5 years warranty
- IP20

Applications

- LED panel、LED down light
  LED spot light

◆ Description

LS-12-XXX SI2 E is a 12W constant current LED driver with 250 and 700mA output current. With it's compact dimensions from 92 x 28 x 21 mm. It is easy to integrate in LED panel、LED down light、LED spot light products. To ensure trouble-free operation, protection is provided against output short circuit and over Load.

◆ Model code

LS-12-XXX SI2 E

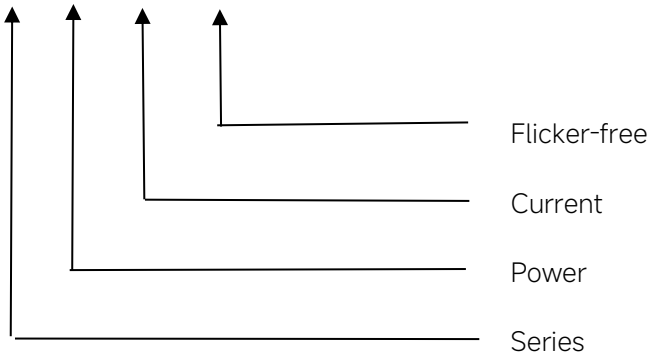

◆ Specification

Output	Constant Current	250mA	280mA	300mA	350mA	500mA	600mA	700mA
	Voltage Range	30-40V				18-24V	15-20V	13-17.2V
	Unload voltage Max.	59VDC				40VDC	35VDC	
	Current Accuracy	±5%						
	Output HF current ripple(≥1KHz)	±5%						
	Output LF current ripple(≤120Hz)	±5%						
	SVM	≤0.4						
	P_{st}	≤1						
	Efficiency(Typ.)	≥82%@Full load,230V						
Input	Rated input voltage	220-240VAC						
	Range of input voltage	198-264VAC						
	Frequency(Hz)	50/60 Hz						
	Displacement factor	≥0.7						
	Power Factor	0.6C@Full load,230V						
	Input Current max	150mA	160mA	180mA		160mA		
	Start-up time	< 0.5S						
	No Load Power	≤0.5W						
Protection	Over Load Protection	103-130%						
		YES/Auto Resume						
	Over Voltage Protection	59VDC						
		YES/Auto Resume						
	Short circuit Protection	YES/Auto Resume						
capability	Surge capability (L-N)	1KV						
	Surge capability (L/N-Ground)	NA						
Environment	Operating Temperature	-20℃~+45℃						
	Humidity	20%-90%RH						
	Tc	80℃			85℃			
	Storage Temperature	-25℃~+60℃						
	Life time	> 50,000h@Tc=80℃						
	Noise	≤20dB(A)@10cm						
Surface	Dimension	92X28X21 (LXWXH)mm						
	material	PP						
statutory	Safety Standards	GB19510. 1, GB19510. 14;IEC61347- 1, IEC61347-2- 13;EN61347- 1, EN61347-2-13;AS/NZS 61347- 1, AS/NZS 61347-2- 13;EN62384						
	EMC	GB/T17743, GB17625. 1;EN55015, EN61000-3-2, EN61000-3-3, EN61547;EN55015, EN61000-3-2, EN61000-3-3, EN61547,EN 62493;EN61000-4-5						

	Energy Efficiency	Erp2.0 EU 2019/2020
	RoHS	RoHS (2011/65/EU) (EU)2015/863
Note	1.All parameters not specially mentioned are measured at 230VAC input , full load and 25℃ of ambient temperature. 2.Ripple & Noise are measured at 20MHz of bandwidth by using a 300mm twisted pair-wire terminated with a 0.1uF & 47 uF parallel capacitor. 3.Data are typical values obtained from test samples 4.The over-temperature protection of the product is provided by the IC. 5.All Eaglerise power supply are complied with EMI regulations. Since they are belong to component and will be installed inside system enclosure. When they are integrated into a system, the EMI characteristics of the system must be re-verified again.	

◆ Model list

Number	Model number	Output			
		Current (mA)	Voltage (VDC)	Voltage No load (VDC)	Power (W)
1	LS-12-250 SI2 E	250	30-40	59	10
2	LS-12-280 SI2 E	280			11.2
3	LS-12-300 SI2 E	300			12
4	LS-12-350 SI2 E	350			14
5	LS-12-500 SI2 E	500	18-24	40	12
6	LS-12-600 SI2 E	600	15-20	35	12
7	LS-12-700 SI2 E	700	13-17.2	35	12

◆ Inrush Current

I_{peak}	T_{width}	B10	B16	B20	C10	C16	C20
8.44A	**80μs**	26pcs	42pcs	53pcs	26pcs	42pcs	53pcs

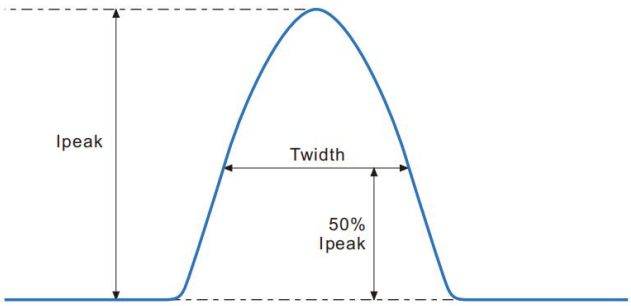

Remarks:

1.The number of drives mounted under different MCBs in the table is the maximum value. Please do not exceed this number during installation.

2.Different brands and models of miniature circuit breakers, the number of drives mounted will be slightly different.

◆ Wiring diagram

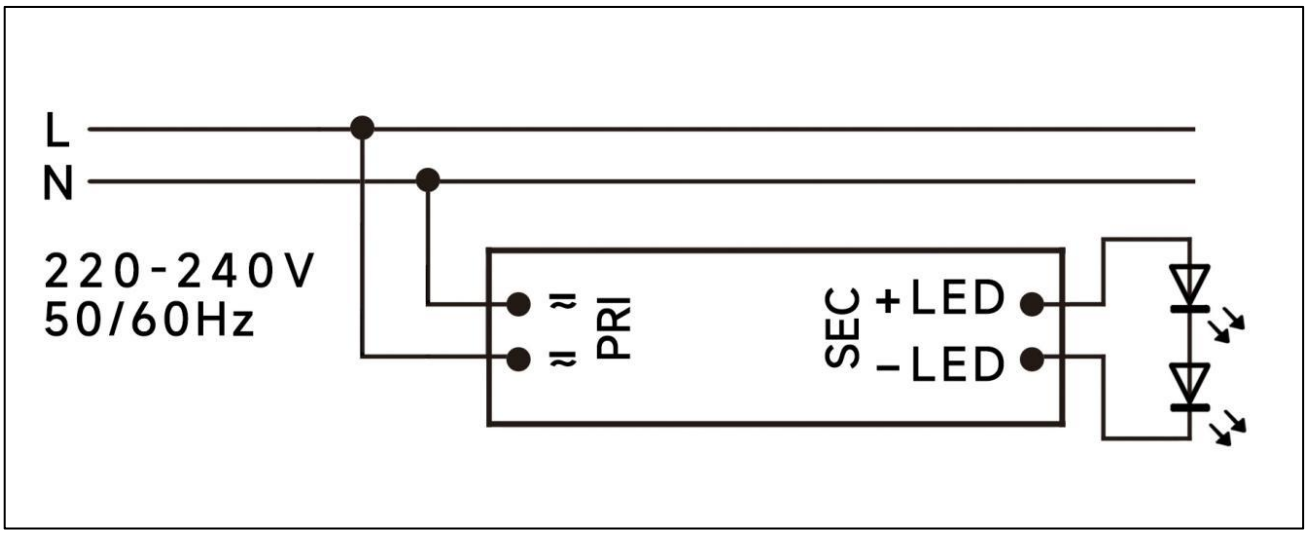

◆ 2D diagram

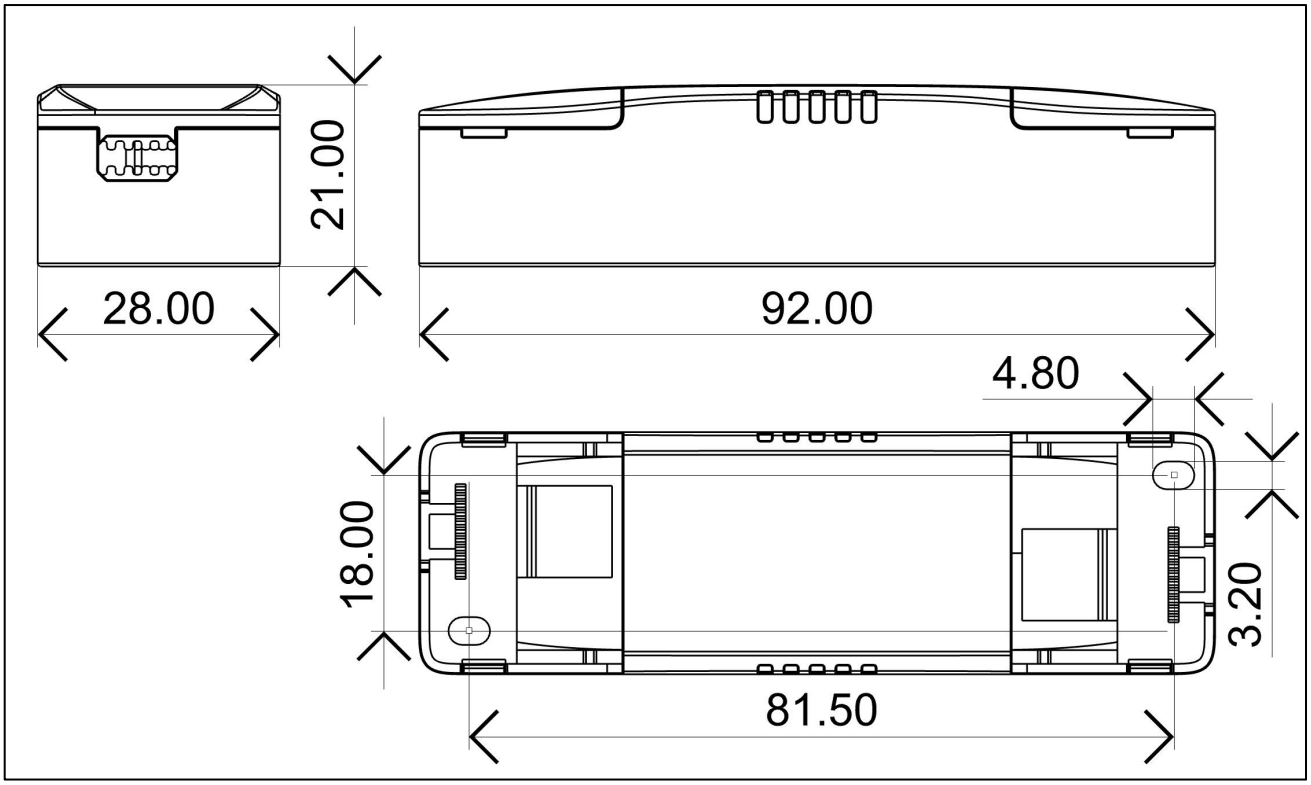

◆ Wiring & Connections

Specification item		Value （Unit ）
Input	Input wire cross-section	0.5...1.5 mm^2 （With side caps：0.75...1.5 mm^2）
	Input wire gauge.	16...20 AWG （With side caps：16...22 AWG ）
	Input wire strip length	7...9mm
Output	Output wire cross-section	0.5...1.5 mm^2
	Output wire gauge.	16...20 AWG
	Output wire strip length	7...9mm

◆ Recommended wire

Wire cross-section	Wire type
2*0.5mm^2	H03VVH2-F 2core
2*0.75mm^2	H03VVH2-F 2core
1.5mm^2	CCC 08(RV-90)
16AWG(1.25mm^2)	UL1015

Note:Solid wire is risky to use on an angled terminal.Stranded wire is recommended for this kind of use.

◆ Curve for LS-12-300 SI2 E, Io=300mA

Lifetime vs. Temperature Curve

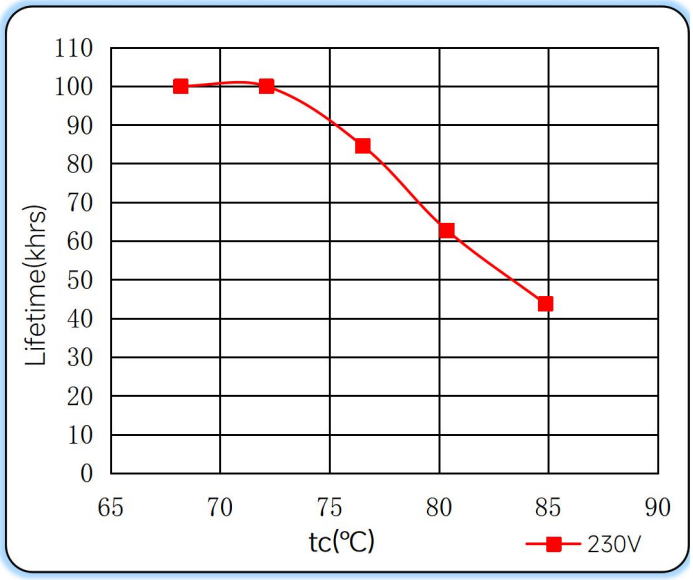

Efficiency vs. Load

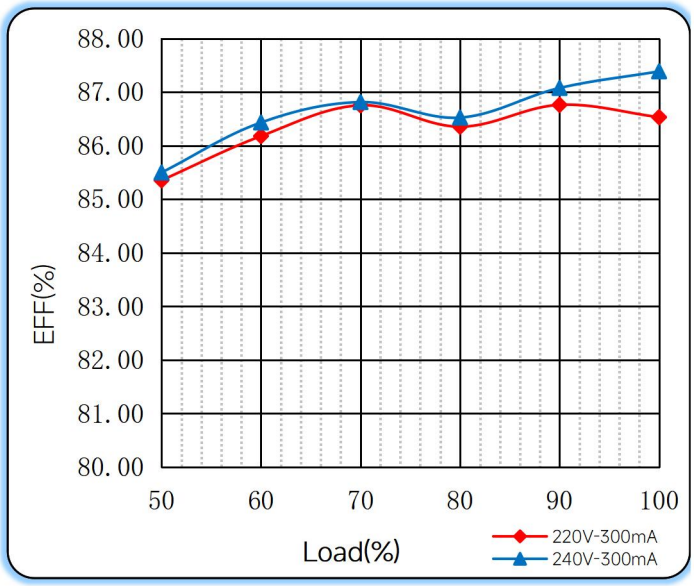

Power Factor Characteristics

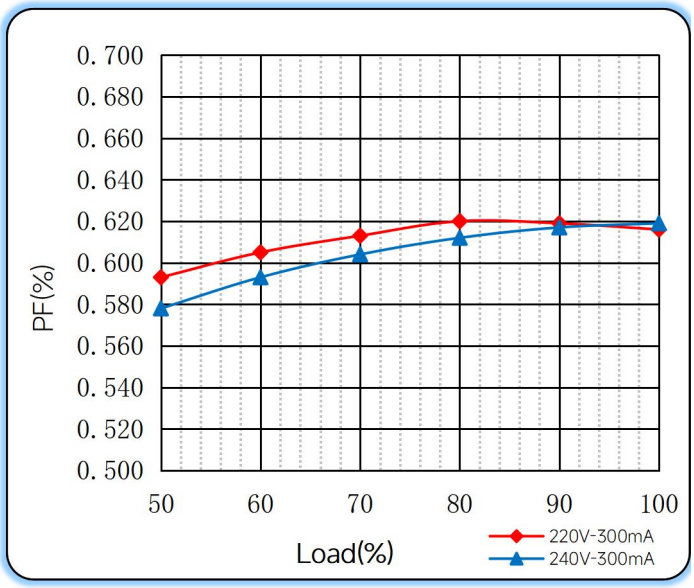

THD vs. Load

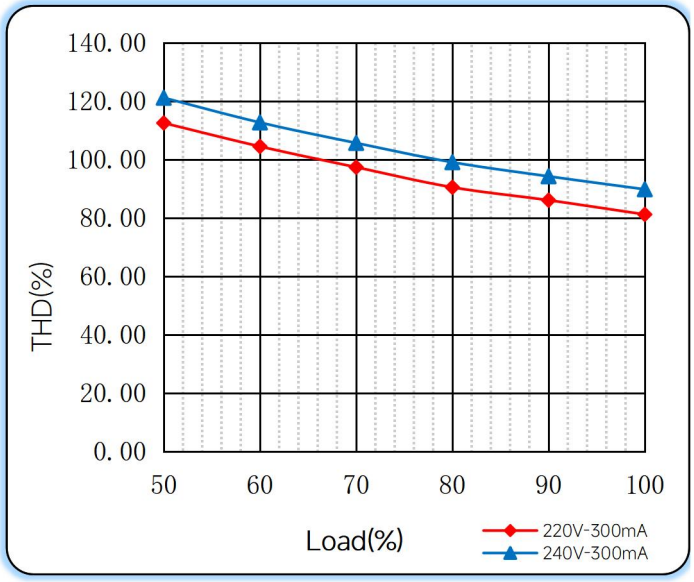

◆ Operating window

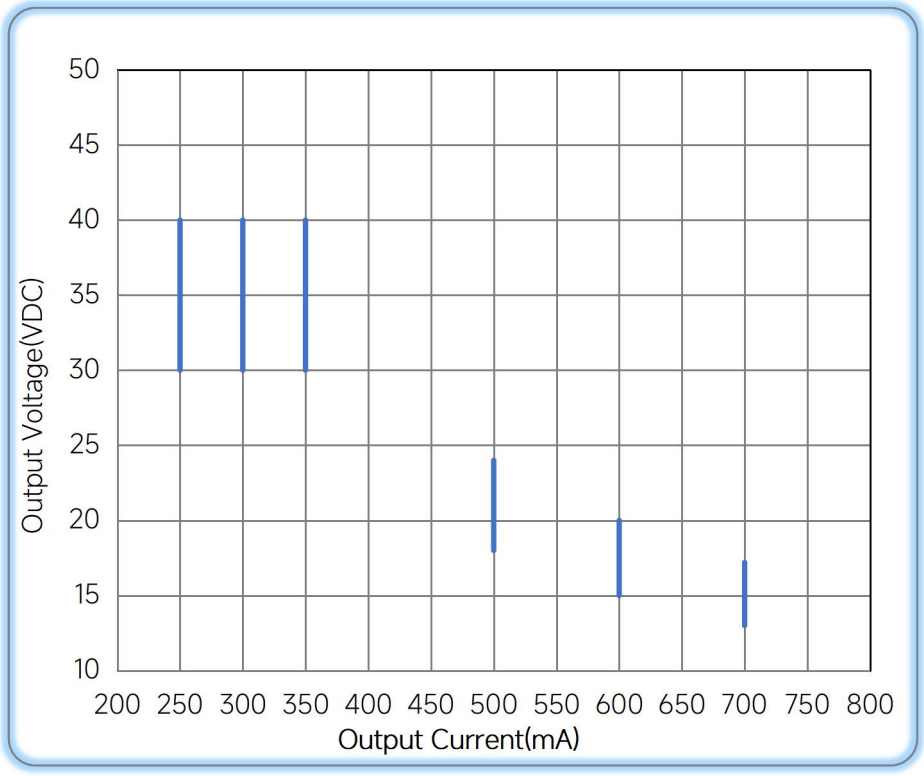

◆ Revision Updates

ITEM	BEFORE	AFTER	VERSION	DATE
Initial			A	2023/08/23
Over Load Protection	103-120%	103-130%	B	2023/09/22
Current Accuracy		update	C	2023/11/20

Remark:The final interpretation of the contents of the specification belongs to Eaglerise Electric & Electronic (China) Co., Ltd.