21W Constant Current power supply

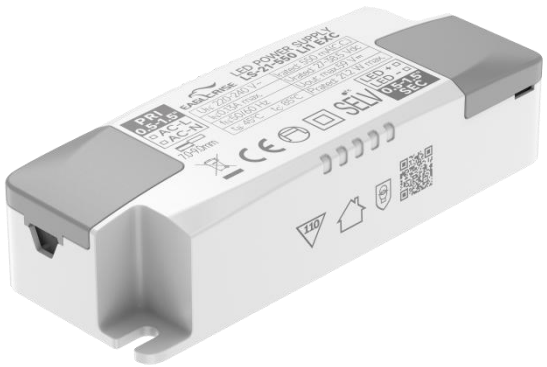

■Approve

CE CB EAC CCC SELV

Features

- For luminaries of protection Class II, SELV, independent
- Input Voltage 220-240VAC
- Protections: SCP/OLP/OVP/OTP
- Power Factor :≥0.95
- Efficiency: ≥85%
- 5 years warranty

Applications

- LED panel、LED down light
  LED spot light

◆ Description

LS-21-XXX LI1 EXC is a 21W constant current LED driver that operates from 198-264Vac input with 400 to 550mA output current. With it's compact dimensions from 102 x 38.2 x 25mm it is easy to integrate in LED Panel, spot, down lights. To ensure trouble-free operation, protection is provided against output short circuit and over Load.

◆ Model code

LS-21-XXX LI1 EXC

- Flicker-free
- Current
- Power
- Series

◆ Specification

Output	Constant Current (mA)	400	450	500	550
	Voltage Range(VDC)	27-42			27-38.5
	Unload voltage Max.(VDC))	59V			
	Current Accuracy	±5%			
	Output HF current ripple(≥1KHz)	±5%			
	Output LF current ripple(≤120Hz)	±3%			
	SVM	≤0.4			
	P_{st}	≤1			
	Efficiency(Typ.)	85%		86%	
Input	Rated input voltage	220-240VAC			
	Range of input voltage	198-264VAC			
	Maximum voltage	300VAC@1 h maximum,unit might not operate in this abnormal condition			
	Frequency(Hz)	50/60 Hz			
	Displacement factor(Typ.)	≥0.95			
	Power Factor	≥0.95			
	Input Current max	0.11A	0.12A	0.13A	0.14A
	Start-up time	< 0.5S			
	No Load Power	≤0.5W			
	THD (Typ.)	< 10%			
Protection	Over Load Protection	103-130%			
		YES/Auto Resume			
	Over Voltage Protection	59VDC			
		YES/Auto Resume			
	Short circuit Protection	YES/Auto Resume			
capability	Surge capability (L-N)	1KV			
	Surge capability (L/N-Ground)	NA			
Environment	Operating Temperature	-20℃~+45℃			
	Humidity	10%-90%RH			
	Tc	85℃			
	Storage Temperature	-25℃~+60℃			
	Life time	> 50000h@Tc=75℃			
	Noise	≤20dB(A)@10cm			
Surface	Dimension	102x38.2x25mm			
	material	PC			
Standards	Safety	GB19510. 1, GB19510. 14;IEC61347- 1, IEC61347-2- 13;EN61347- 1, EN61347-2-13;EN62384			
	EMC	GB/T17743, GB17625. 1;EN55015, EN61000-3-2, EN61000-3-3, EN61547;EN61000-4-5;EN61000-4-2,3,4,5,6,8,11, EN61547			

	Energy Efficiency	Erp2.0 EU 2019/2020
	RoHS	RoHS (2011/65/EU) (EU)2015/863
Note	1.All parameters not specially mentioned are measured at 230VAC input , full load and 25℃ of ambient temperature. 2.Ripple & Noise are measured at 20MHz of bandwidth by using a 300mm twisted pair-wire terminated with a 0.1uF & 47 uF parallel capacitor. 3.Switch and dimmer are not recommended to connect between this product output and luminaries. 4.The over-temperature protection of the product is provided by the IC. 5.All Eaglerise power supply are complied with EMI regulations. Since they are belong to component and will be installed inside system enclosure. When they are integrated into a system, the EMI characteristics of the system must be re-verified again.	

◆ Model list

Number	Model number	Input	Output			
		Current (A)	Current (mA)	Voltage (VDC)	Voltage No load (VDC)	Power (W)
1	LS-21-400 LI1 EXC	0.11	400	27-42	59	16.8
2	LS-21-450 LI1 EXC	0.12	450			18.9
3	LS-21-500 LI1 EXC	0.13	500			21
4	LS-21-550 LI1 EXC	0.14	550	27-38.5		21.2

◆ Inrush Current

I_{peak}	T_{width}	B10	B16	B20	C10	C16	C20
15A	**110μs**	51pcs	82pcs	102pcs	61pcs	98pcs	123pcs

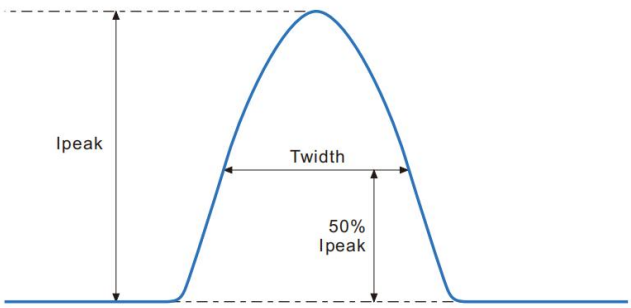

Remarks:
1.The number of drives mounted under different MCBs in the table is the maximum value. Please do not exceed this number during installation.
2.Different brands and models of miniature circuit breakers, the number of drives mounted will be slightly different.

◆ Wiring diagram

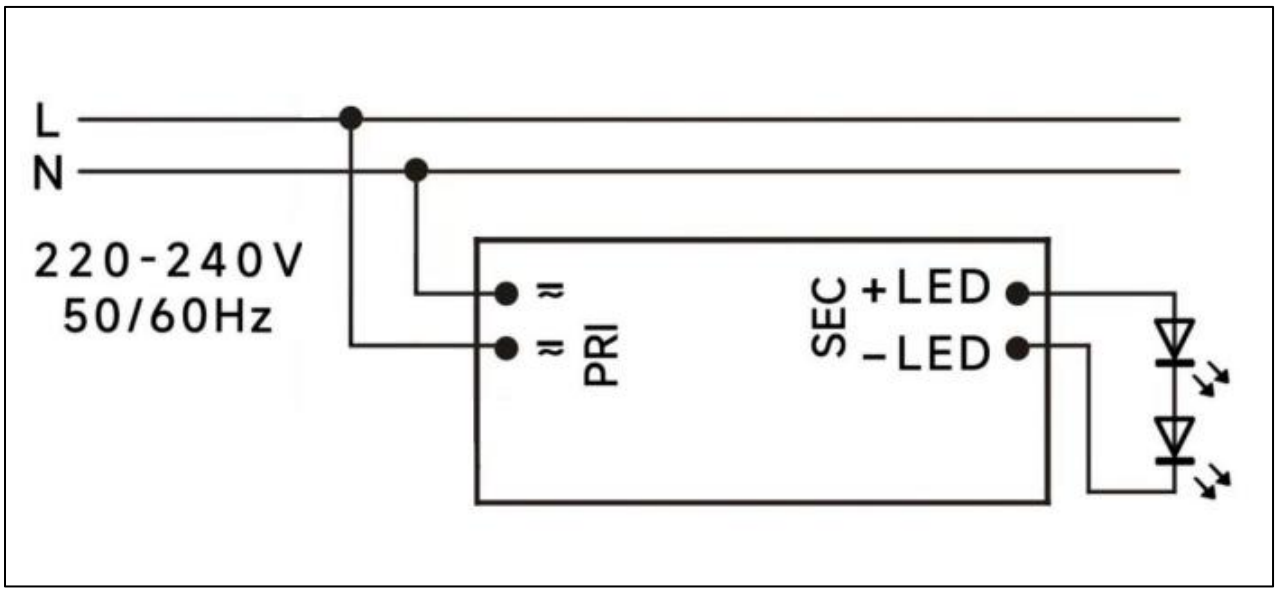

◆ 2D diagram

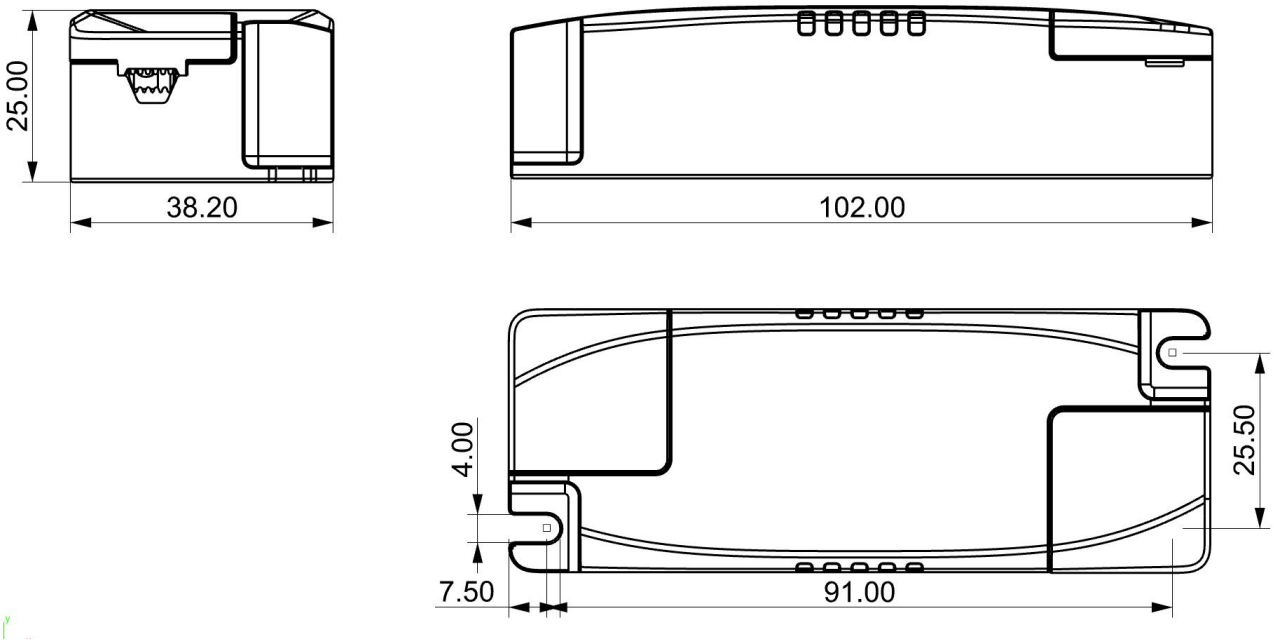

◆ Wiring & Connections

Specification item		Value （Unit ）
Input	Input wire cross-section	0.5...1.5 mm^2
	Input wire gauge.	16...20 AWG
	Input wire strip length	7...9mm
Output	Output wire cross-section	0.5...1.5 mm^2
	Output wire gauge.	16...20 AWG
	Output wire strip length	7...9mm

◆ Recommended wire

Wire cross-section	Wire type
2*0.5mm^2	H03VVH2-F 2core
2*0.75mm^2	H03VVH2-F 2core
1.5mm^2	CCC 08(RV-90)
16AWG(1.25mm^2)	UL1015

Note:Solid wire is risky to use on an angled terminal.Stranded wire is recommended for this kind of use.

◆ Curve for LS-21-XXX LI1 EXC, Io=550mA

Lifetime vs. Temperature Curve

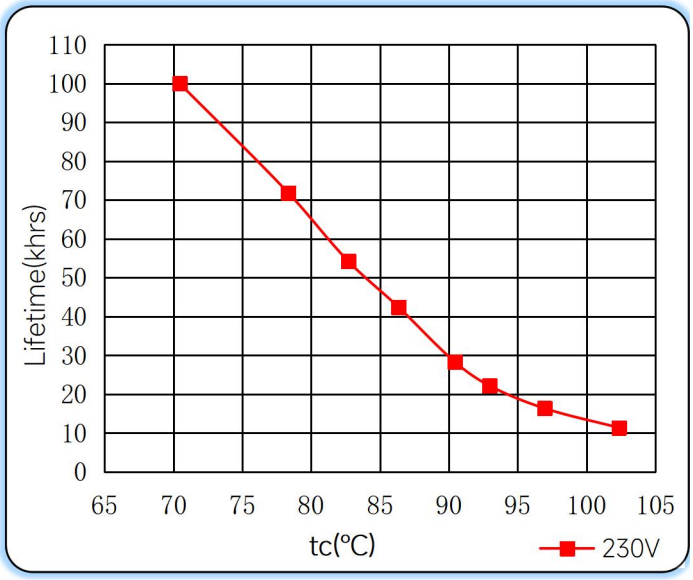

Efficiency vs. Load

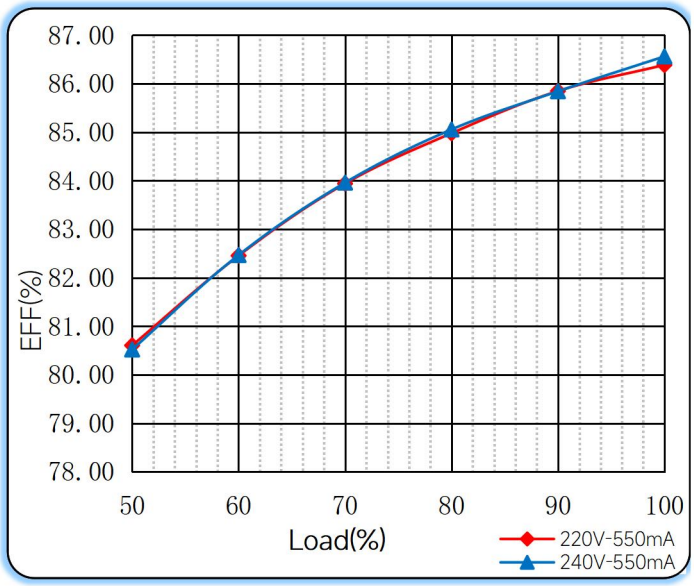

Power Factor Characteristics

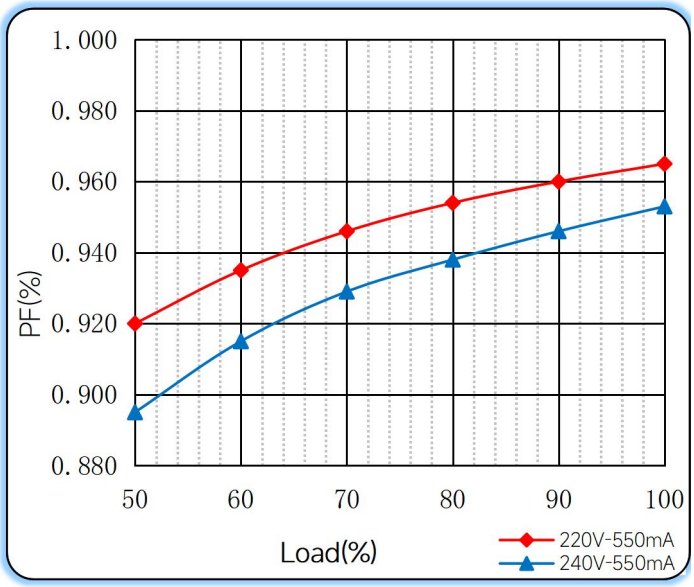

THD vs. Load

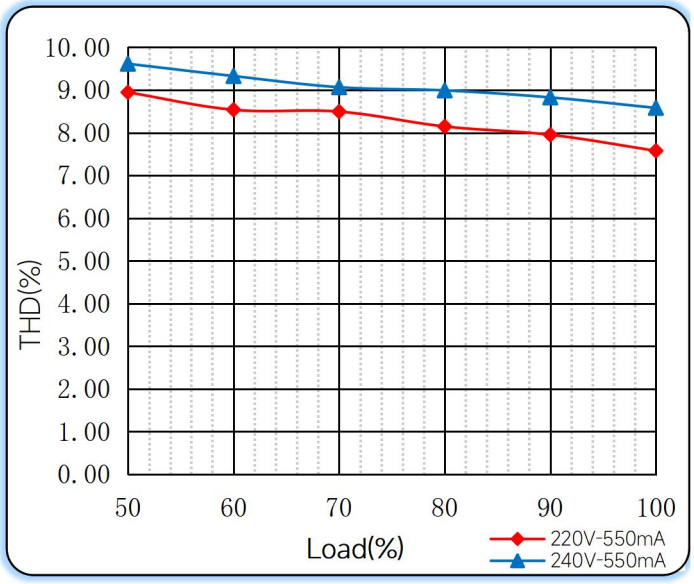

◆ Operating window

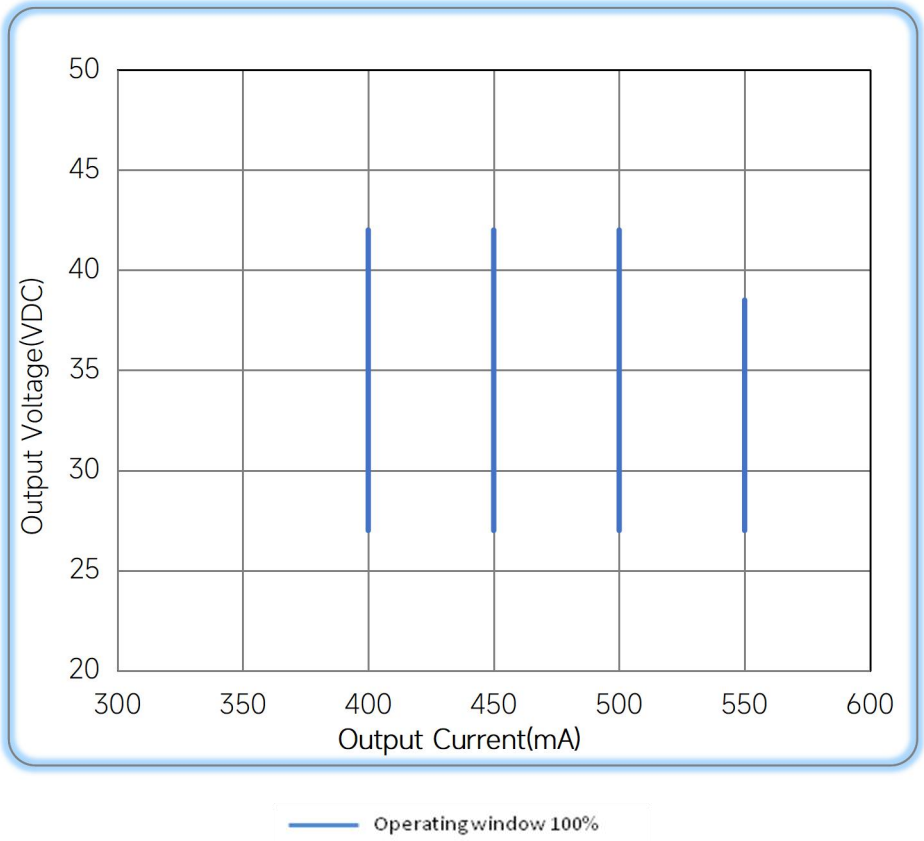

◆ Revision Updates

ITEM	BEFORE	AFTER	VERSION	DATE
Initial			A	2024/01/09
Tc	80℃	85℃	B	2024/08/27

Remark:The final interpretation of the contents of the specification belongs to Eaglerise Electric & Electronic (China) Co., Ltd.