21W Constant Current power supply

■Approve

CCC EAC CE CB SELV

Features

- Class II，SELV，Independent
- Input Voltage: 220-240VAC
- Protections：SCP/OLP/OVP/OTP
- Power Factor：
0.6C@300-400mA,600-700mA
0.55C@450-550mA
- Efficiency：≥85%
- 5 years warranty
- IP20

Applications

- LED panel、LED down light

◆ Description

LS-21-XXX SI1 E is a 21W constant current LED driver with 300~700mA output current. With it's compact dimensions from 92 x 36 x 25 mm it is easy to integrate in LED panel、LED down light、LED spot light products. To ensure trouble-free operation, protection is provided against output short circuit and over Load.

◆ Model code

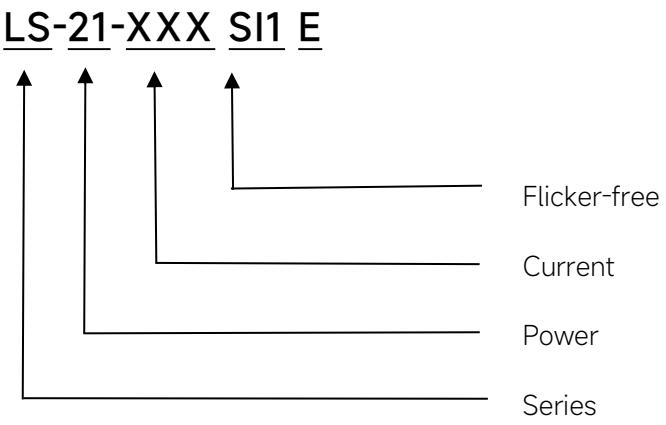

◆ Specification

Output	Constant Current (mA)	300	350	400	....	700
	Voltage Range(VDC)	40-70	42-60	30-42	....	18-30
	Unload voltage Max.	90	80	59	....	50
	Current Accuracy	±5%				
	Output HF current ripple(≥1KHz)	±5%				
	Output LF current ripple(≤120Hz)	±5%				
	SVM	≤0.4				
	P_{st}	≤1				
	Efficiency(Typ.)	≥85%@Full load,230V				
Input	Rated input voltage	220-240VAC				
	Range of input voltage	198-264VAC				
	Maximum voltage	300VAC@1 h maximum,unit might not operate in this abnormal condition				
	Frequency(Hz)	50/60 Hz				
	Displacement factor	≥0.7				
	Power Factor	0.6C@300-400mA,600-700mA;0.55C@450-550mA, Full load,230V				
	Input Current max	0.3A				
	Start-up time	＜0.5S				
	No Load Power	≤0.5W				
Protection	Over Load Protection	103-120%				
		YES/Auto Resume				
	Over Voltage Protection(VDC)	90	80	59	....	50
		YES/Auto Resume				
	Short circuit Protection	YES/Auto Resume				
	Over Temperature Protection	YES/Auto Resume				
Environment	Operating Temperature	-20℃~+45℃				
	Humidity	20%-90%RH				
	Tc	80℃				
	Storage Temperature	-25℃~+60℃				
	Life time	＞30,000h@tc=75℃; ＞60,000h@tc=65℃				
Surface	Dimension	92x36x25 (LxWxH)mm				
Standards	Safety	GB19510. 1, GB19510. 14;IEC61347- 1, IEC61347-2- 13;EN61347- 1, EN61347-2-13,EN62384				
	EMC	GB/T17743, GB17625. 1,EN55015, EN61000-3-2, EN61000-3-3, EN61547,EN61000-4-5,EN61000-4-2,3,4,5,6,8,11, EN61547				
	Energy Efficiency	Erp2.0 EU 2019/2020				
	RoHS	RoHS (2011/65/EU) (EU)2015/863				

Note	1. All parameters NOT specially mentioned are measured at 230VAC input , full load and 25℃ of ambient temperature. 2. Ripple & Noise are measured at 20MHz of bandwidth by using a 300mm twisted pair-wire terminated with a 0.1uF & 47 uF parallel capacitor. 3. Data are typical values obtained from test samples 4. Switch and dimmer are not recommended to connect between this product output and luminaries.

◆ Model list

Number	Model number	Output			
		Current (mA)	Voltage (VDC)	Voltage No load (VDC)	Power (W)
1	LS-21-300 SI1 E	300	40-70	90	21
2	LS-21-350 SI1 E	350	42-60	80	21
3	LS-21-400 SI1 E	400	30-42	59	16.8
4	LS-21-450 SI1 E	450	30-42		18.9
5	LS-21-500 SI1 E	500	30-42		21
6	LS-21-550 SI1 E	550	30-40		22
7	LS-21-600 SI1 E	600	27-39		23.4
8	LS-21-650 SI1 E	650	20-32	50	20.8
9	LS-21-700 SI1 E	700	18-30	50	21

◆ Inrush Current

I^{peak}	Twidth	B10	B16	B20	C10	C16	C20
12.5A	**100μs**	26pcs	42pcs	53pcs	26pcs	42pcs	53pcs

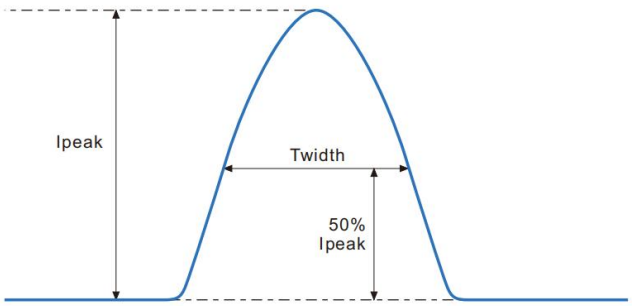

Remarks:

1.The number of drives mounted under different MCBs in the table is the maximum value. Please do not exceed this number during installation.

2.Different brands and models of miniature circuit breakers, the number of drives mounted will be slightly different.

◆ Wiring diagram

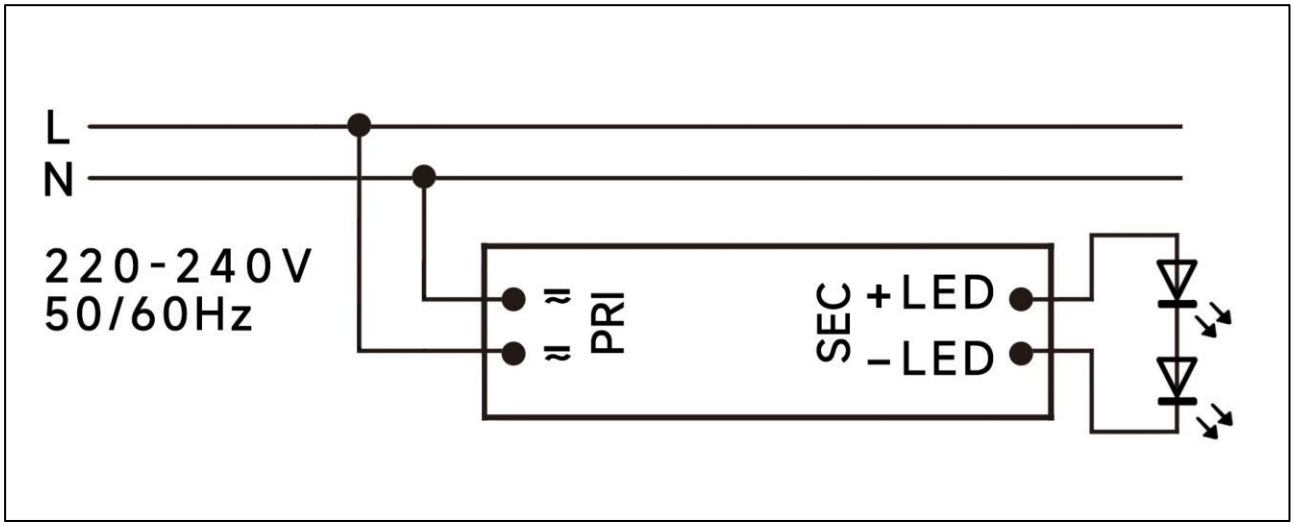

◆ 2D diagram

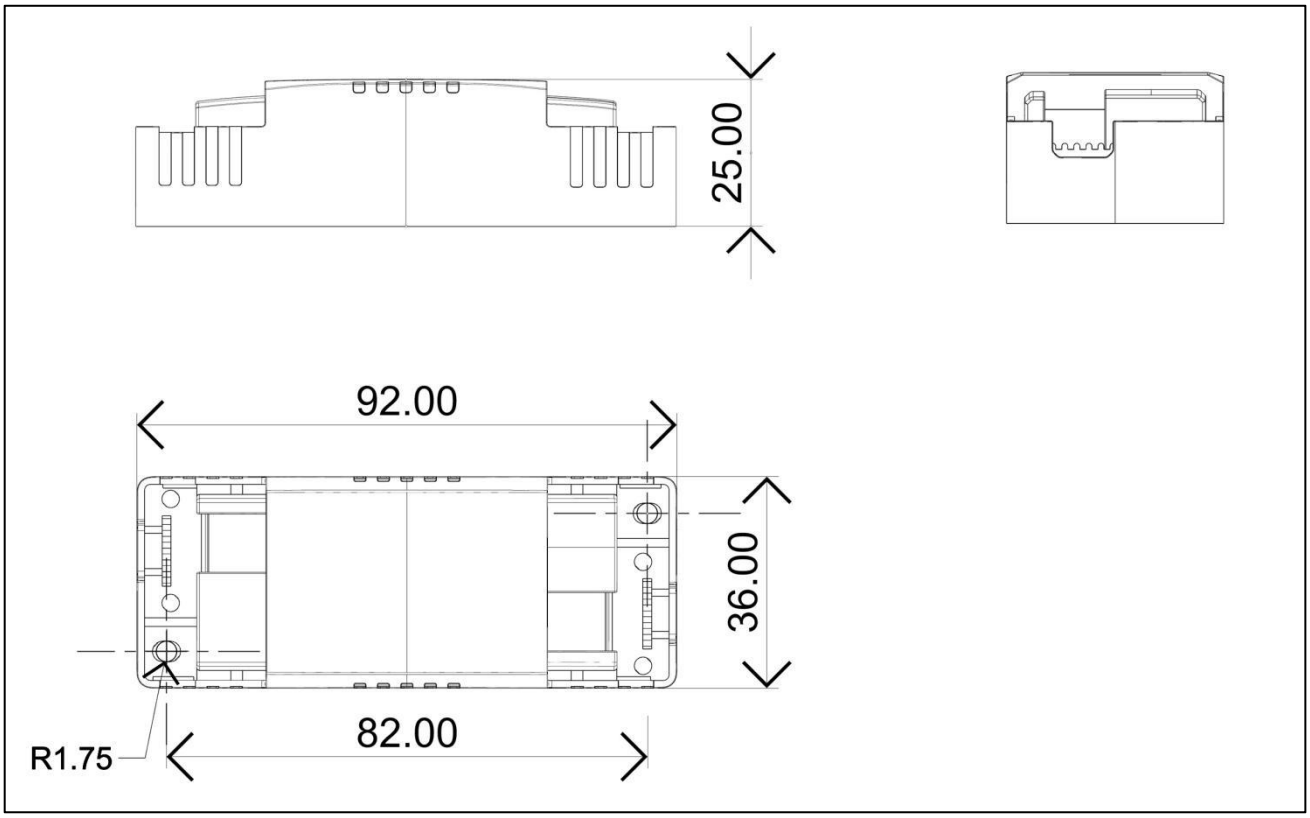

◆ Wiring & Connections

Specification item		Value （Unit ）
Input	Input wire cross-section	0.5...1.5 mm^2
	Input wire gauge.	16...20 AWG
	Input wire strip length	7...9mm
Output	Output wire cross-section	0.5...1.5 mm^2
	Output wire gauge.	16...20 AWG
	Output wire strip length	7...9mm

Note:Solid wire is risky to use on an angled terminal.Stranded wire is recommended for this kind of use.

◆ Curve for LS-21-XXX SI1 E, Io=500mA

Lifetime vs. Temperature Curve

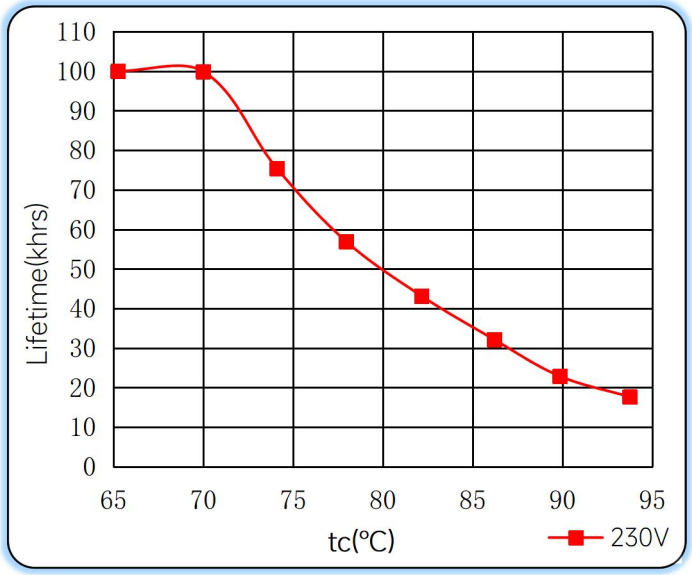

Efficiency vs. Load

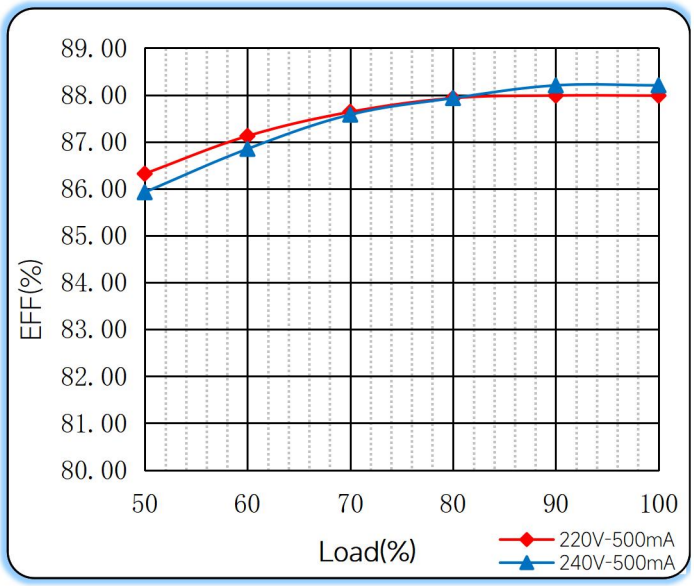

Power Factor Characteristics

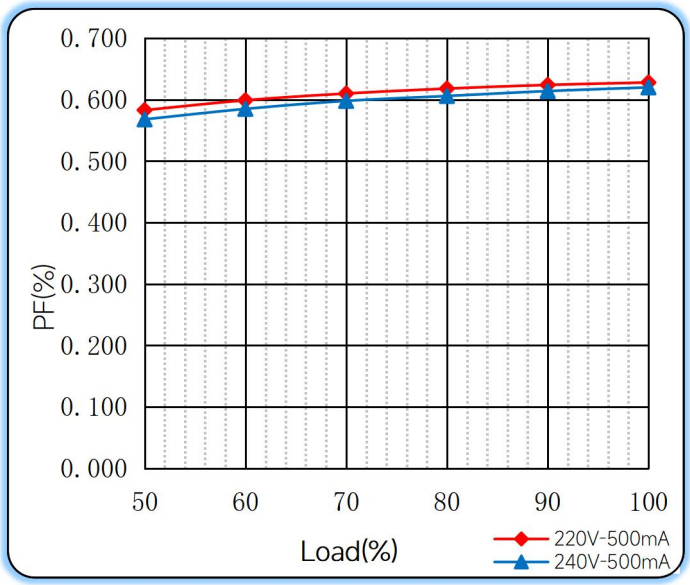

THD vs. Load

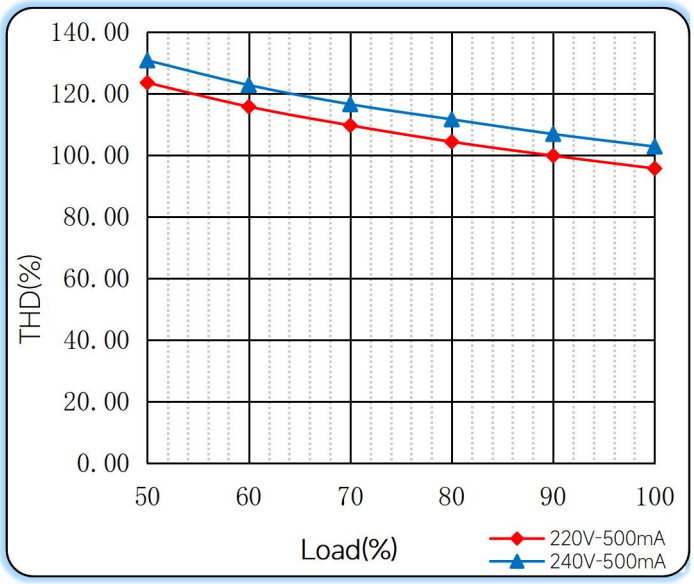

◆ Operating window

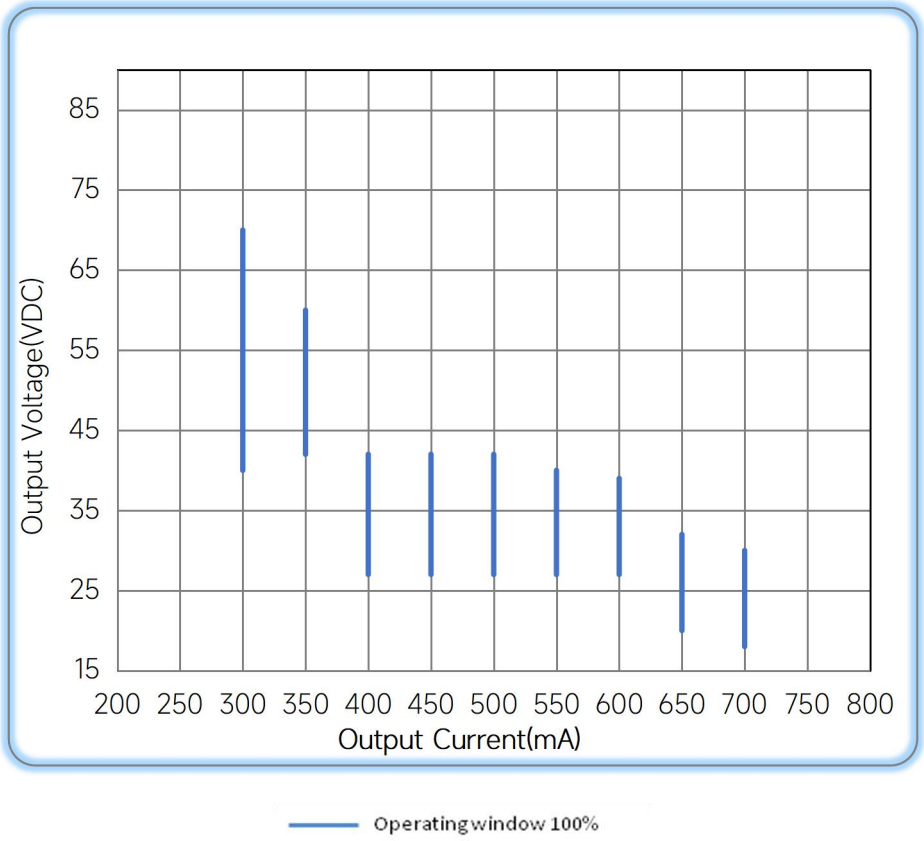

◆ Revision Updates

ITEM	BEFORE	AFTER	VERSION	DATE
Initial			A	2023/12/22
Unload voltage Max.	60V	69V	B	2024/02/02
Voltage Range		update	C	2024/03/25
PF		update	D	2024/09/10

Remark:The final interpretation of the contents of the specification belon s to Eaglerise Electric & Electronic (China) Co., Ltd.