40W Constant Current power supply

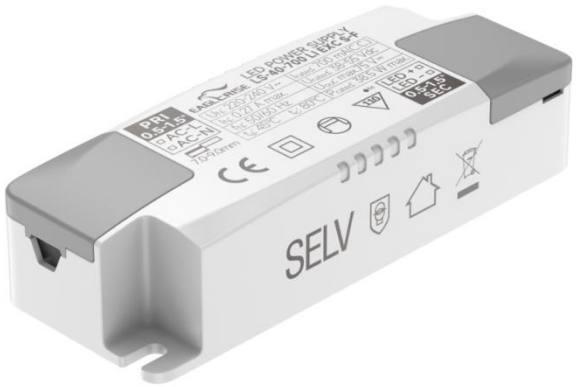

■Approve

Features

- For luminaries of protection Class II, SELV, Independent
- Input Voltage: 220-240VAC
- Protections: SCP/OLP/OVP/OTP
- Power Factor: 0.95
- Efficiency: 89%
- 5 years warranty
- IP20

Applications

- LED panel、LED down light

◆ Description

LS-40-XXX LI EXC S-F is a 40W constant current LED driver with 300 to 800mA output current. With it's compact dimensions from 102 x 38.2 x 25mm it is easy to integrate in LED Panel, spot and down lights product. To ensure trouble-free operation, protection is provided against output short circuit and over Load.

◆ Model code

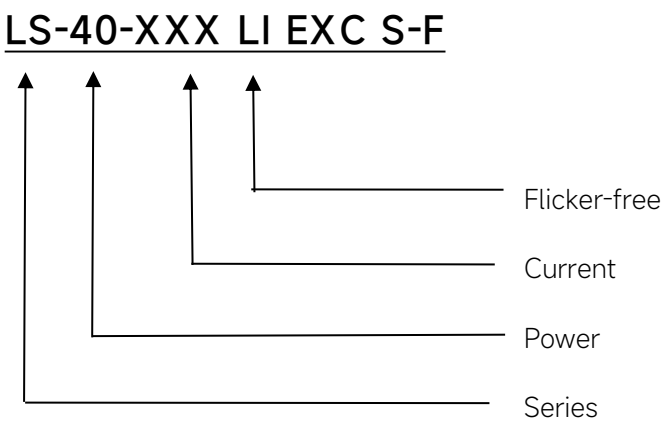

◆ Specification

Output	Constant Current (mA)	300	500	600	700	800
	Voltage Range(VDC)	90-132	50-80	47-67	38-55	35-50
	Unload voltage Max.	160VDC	100VDC	85VDC	75VDC	70VDC
	Current Accuracy	±5%				
	Output HF current ripple(≥1KHz)	±3%				
	Output LF current ripple(≤120Hz)	±3%				
	SVM	≤0.4				
	Pst	≤1				
	Efficiency(Typ.)	89%				
Input	Rated input voltage	220-240V				
	Range of input voltage	198-264VAC				
	Maximum voltage	300VAC@1 h maximum,unit might not operate in this abnormal condition				
	Range of input voltage(VDC)	176-280VDC				
	Frequency(Hz)	0/50/60 Hz				
	Displacement factor	≥0.9				
	Power Factor(Typ.230VAC)	0.95				
	Input Current max (mA)	270mA				
	Start-up time	＜0.5S				
	No Load Power	≤0.5W				
	THD (Typ.)	<10%				
Protection	Over Load Protection	103-130%				
		YES/Auto Resume				
	Over Voltage Protection	160VDC	100VDC	850VDC	75VDC	70VDC
		YES/Auto Resume				
	Short circuit Protection	YES/Auto Resume				
	Over Temperature Protection	YES/Auto Resume				
capability	Surge capability (L-N)	2KV				
	Surge capability (L/N-Ground)	NA				
Environment	Operating Temperature	-20℃~+45℃				
	Humidity	20%-90%RH				
	Tc	80℃				
	Storage Temperature	-25℃~+60℃				
	Life time	＞50000h@Tc=75℃				
	Noise	≤20dB(A)@10cm				
Surface	Dimension	102X38.2X25(LXWXH)mm				
	material	PC				
Standards	Safety	GB19510. 1, GB19510. 14;IEC61347- 1, IEC61347-2- 13;AS/NZS 61347- 1, AS/NZS 61347-2- 13;AS 61347.2.13;EN62384;				

	EMC	GB/T17743, GB17625. 1;EN55015, EN61000-3-2, EN61000-3-3, EN61547;EN55015, EN61000-3-2, EN61000-3-3, EN61547,EN 62493;EN61000-4-5;EN61000-4-2,3,4,5,6,8,11, EN61547
	ErP	Erp2.0 EU 2019/2020
	RoHS	RoHS (2011/65/EU) (EU)2015/863
Note	1.All parameters not specially mentioned are measured at 230VAC input , full load and 25℃ of ambient temperature. 2.Ripple & Noise are measured at 20MHz of bandwidth by using a 300mm twisted pair-wire terminated with a 0.1uF & 47 uF parallel capacitor. 3.Switch and dimmer are not recommended to connect between this product output and luminaries. 4.The DC input for this product is only used for emergency lighting and applies to functional and safety requirements, EMC is not considered. 5.All Eaglerise power supply are complied with EMI regulations. Since they are belong to component and will be installed inside system enclosure. When they are integrated into a system, the EMI characteristics of the system must be re-verified again.	

◆ Model list

Number	Model number	Output			
		Current (mA)	Voltage (VDC)	Voltage No load (VDC)	Power (W)
1	LS-40-300 LI EXC S-F	300	90-132	160	39.6
2	LS-40-500 LI EXC S-F	500	50-80	100	40
3	LS-40-600 LI EXC S-F	600	47-67	85	40.2
4	LS-40-700 LI EXC S-F	700	38-55	75	38.5
5	LS-40-800 LI EXC S-F	800	35-50	70	40

◆ Inrush Current

I_{peak}	T_{width}	B10	B16	B20	C10	C16	C20
35.4A	**128μs**	18pcs	29pcs	37pcs	29pcs	47pcs	59pcs

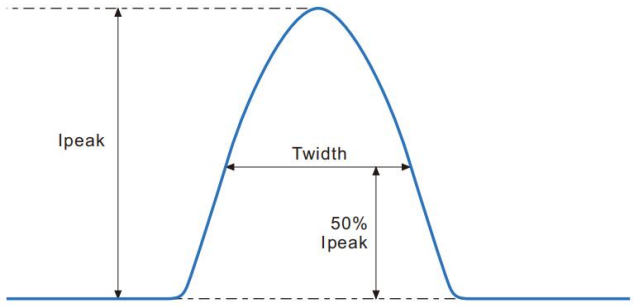

Remarks:

1.The number of drives mounted under different MCBs in the table is the maximum value. Please do not exceed this number during installation.

2.Different brands and models of miniature circuit breakers, the number of drives mounted will be slightly different.

◆ Wiring diagram

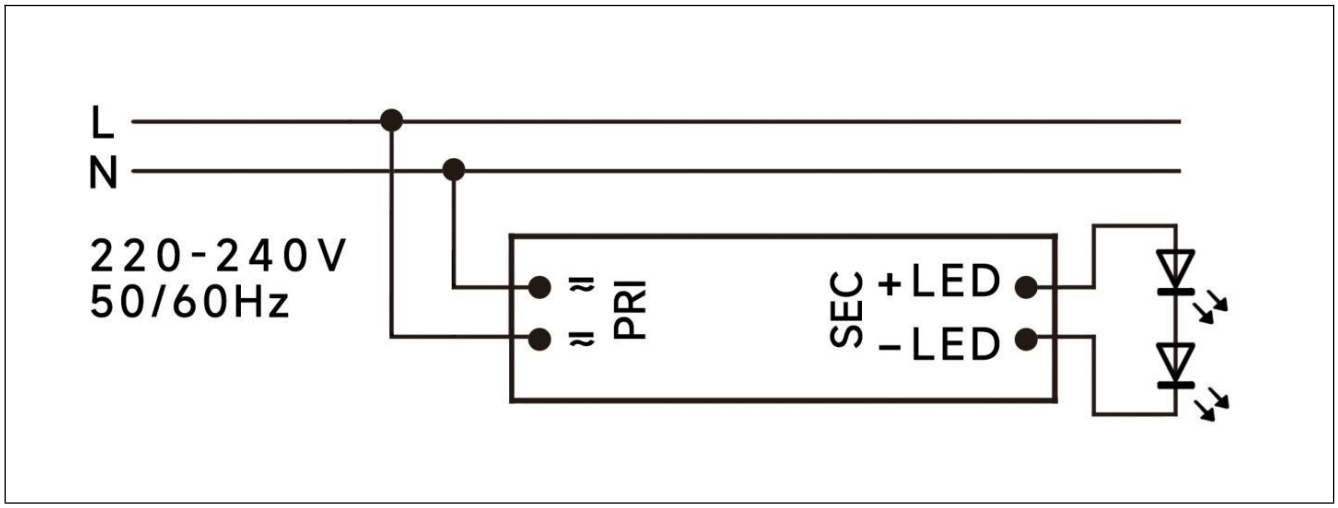

◆ 2D diagram

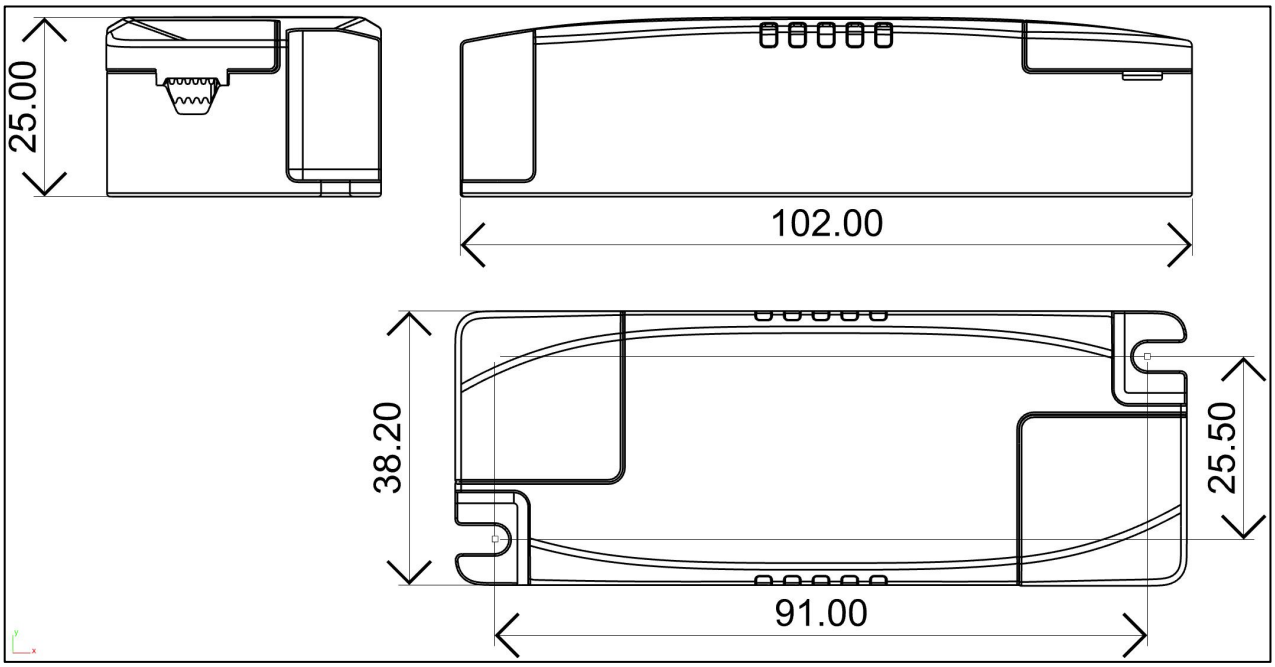

Termina

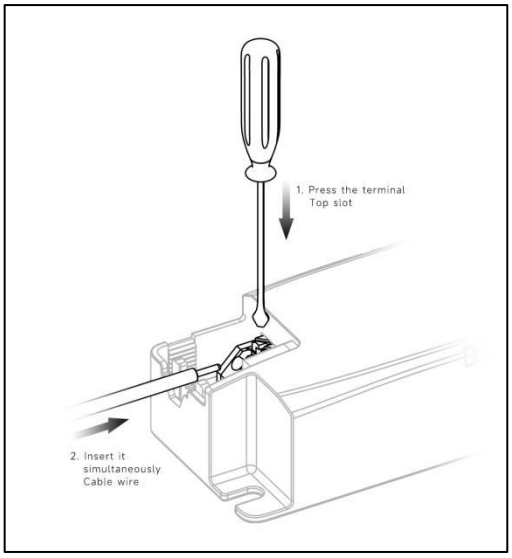

◆ Wiring & Connections

Specification item		Value （Unit ）
Input	Input wire cross-section	0.5...1.5 mm^2
	Input wire gauge.	16...20 AWG
	Input wire strip length	7...9mm
Output	Output wire cross-section	0.5...1.5 mm^2
	Output wire gauge.	16...20 AWG
	Output wire strip length	7...9mm

Note:Solid wire is risky to use on an angled terminal.Stranded wire is recommended for this kind of use.

◆ Packaging

Model	Product Dimensions(mm)	weight/piece	Outer carton dimension(mm)	Quantity/carton	Net weight/carton(Kg)	Gross weight/carton(Kg)
LS-40-XXX LI EXC S-F	102X38.2X25mm	0.061	370X275X215mm	150	9.15	9.77

◆ Curve for LS-40-800 LI EXC S-F, Io=800mA

Lifetime vs. Temperature Curve

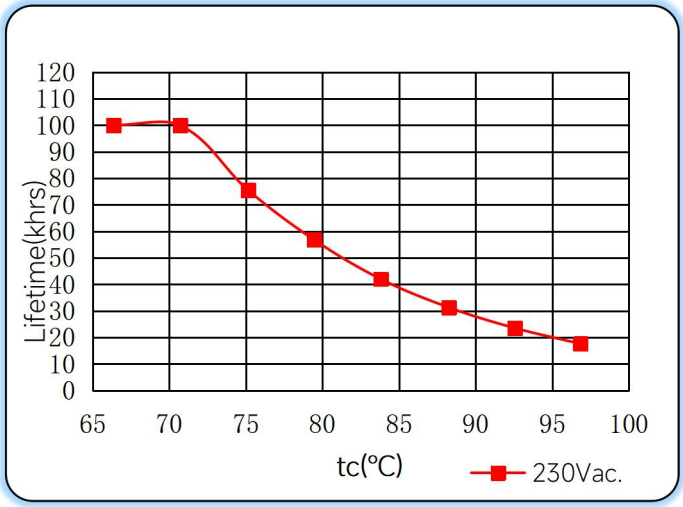

Efficiency vs. Load

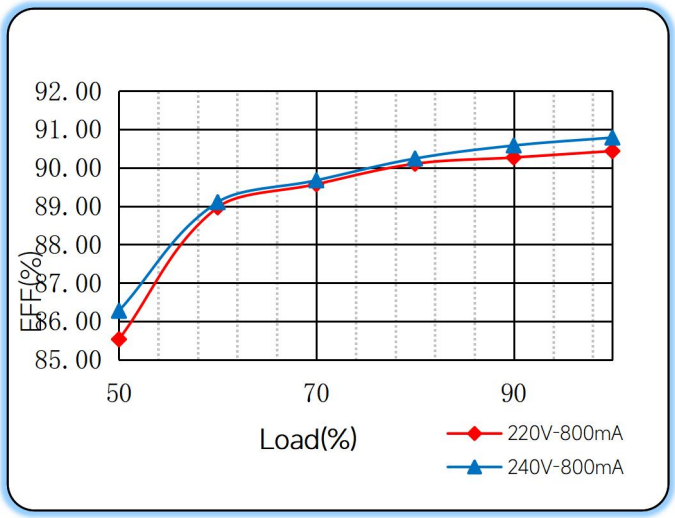

Power Factor Characteristics

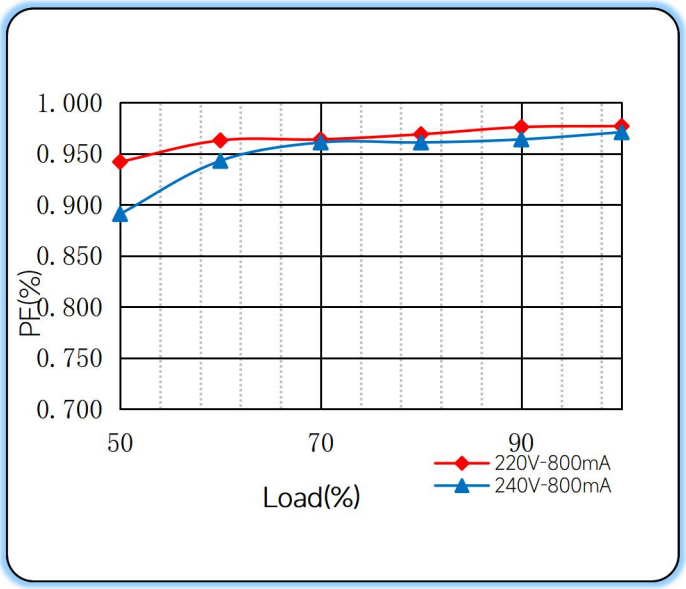

THD vs. Load

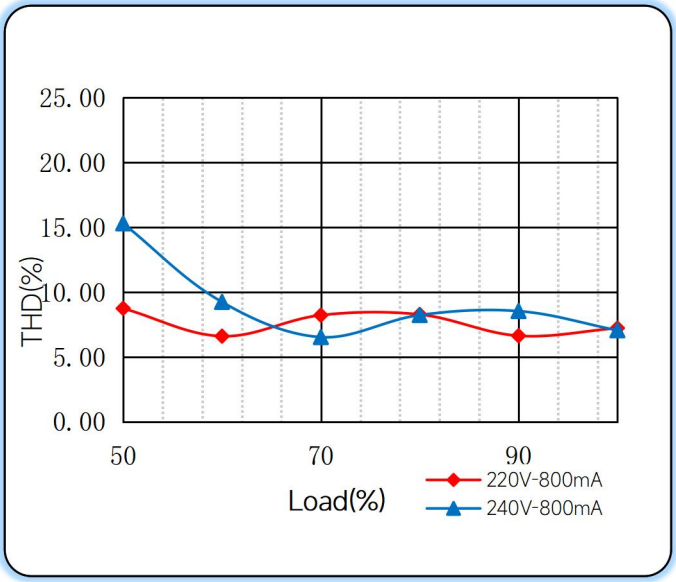

◆ Operating window

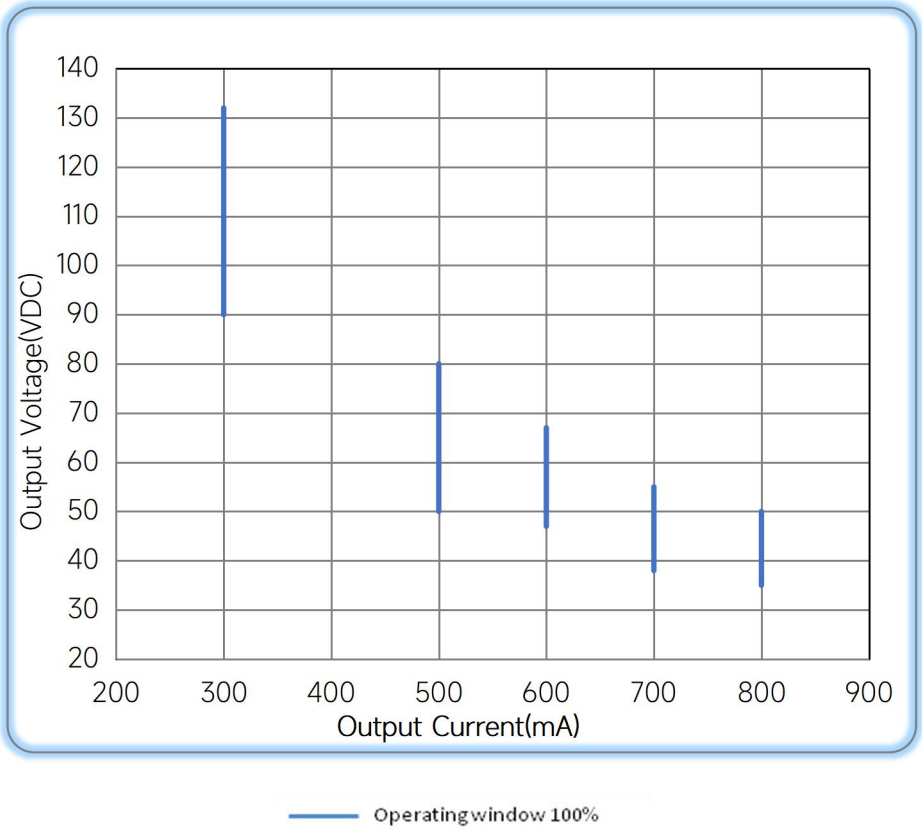

◆ Revision Updates

ITEM	BEFORE	AFTER	VERSION	DATE
Initial			A	2024/10/26
THD (Typ.)	<7%	<10%	B	2025/05/28

Remark:The final interpretation of the contents of the specification belongs to Eaglerise Electric & Electronic (China) Co., Ltd.