# 40W Constant Current power supply

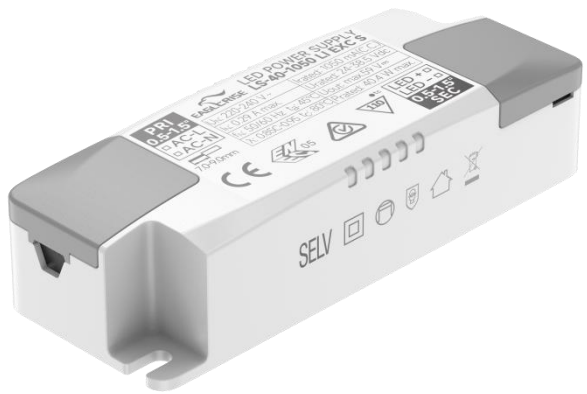


Features

- Class II，SELV，independent
- Input Voltage： 220-240VAC
- Protections：SCP/OLP/OVP/OTP
- Power Factor：0.95
- Efficiency：87-89%
- 5 years warranty
- IP20

Applications

- LED panel、LED down light
  LED spot light

■**Approve**

## ◆ Description

LS-40-XXX LI EXC S is a 40W constant current LED driver with 600 to 1050mA output current. With it's compact dimensions from 102 x 38.2 x 25mm it is easy to integrate in LED Panel, spot and down lights product. To ensure trouble-free operation, protection is provided against output short circuit, over load, over voltage and over temperature.

## ◆ Model code

LS-40-XXX LI EXC S

- Flicker-free
- Current
- Power
- Series

## ◆ Specification

| | | | | | | | | | | | |
|---|---|---|---|---|---|---|---|---|---|---|---|
| Output | Constant Current (mA) | 600 | 650 | 700 | 750 | 800 | 850 | 900 | 950 | 1000 | 1050 |
| | Voltage Range(VDC) | 24-42 | | | | | | | | 24-40 | 24-38.5 |
| | Unload voltage Max. | 59VDC | | | | | | | | | |
| | Current Accuracy | ±5% | | | | | | | | | |
| | Output HF current ripple(≥1KHz) | ±3% | | | | | | | | | |
| | Output LF current ripple(≤120Hz) | ±3% | | | | | | | | | |
| | SVM | ≤0.4 | | | | | | | | | |
| | Pst | ≤1 | | | | | | | | | |
| | Efficiency(Typ.) | 87% | | | | | | 89% | | | |
| Input | Rated input voltage | 220-240V | | | | | | | | | |
| | Range of input voltage | 198-264VAC | | | | | | | | | |
| | Maximum voltage | 300VAC@1 h maximum,unit might not operate in this abnormal condition | | | | | | | | | |
| | Range of input voltage(VDC) | 176-280VDC | | | | | | | | | |
| | Frequency(Hz) | 0/50/60 Hz | | | | | | | | | |
| | Displacement factor | ≥0.9 | | | | | | | | | |
| | Power Factor(Typ.230VAC) | 0.95 | | | | | | | | | |
| | Input Current max (mA) | 170 | 190 | 200 | 220 | 230 | 250 | 260 | 270 | 270 | 290 |
| | Start-up time | < 0.5S | | | | | | | | | |
| | No Load Power | ≤0.5W | | | | | | | | | |
| | Standby Power | ≤0.5W | | | | | | | | | |
| | THD (Typ.) | <10% | | | | | | | | ≤7% | |
| Protection | Over Load Protection | 103-130% | | | | | | | | | |
| | | YES/Auto Resume | | | | | | | | | |
| | Over Voltage Protection | 59VDC | | | | | | | | | |
| | | YES/Auto Resume | | | | | | | | | |
| | Short circuit Protection | YES/Auto Resume | | | | | | | | | |
| | Over Temperature Protection | YES/Auto Resume | | | | | | | | | |
| capability | Surge capability (L-N) | 2KV | | | | | | | | | |
| | Surge capability (L/N-Ground) | 4KV | | | | | | | | | |
| Environment | Operating Temperature | -20℃~+45℃ | | | | | | | | | |
| | Humidity | 20%-90%RH | | | | | | | | | |
| | Tc | 80℃ | | | | | | | | | |
| | Storage Temperature | -25℃~+60℃ | | | | | | | | | |
| | Life time | > 50000h@Tc=75℃ | | | | | | | | | |
| | Noise | ≤20dB(A)@10cm | | | | | | | | | |
| Surface | Dimension | 102X38.2X25(LXWXH)mm | | | | | | | | | |
| | material | PC | | | | | | | | | |

| | | |
|---|---|---|
| Standards | Safety | GB19510. 1, GB19510. 14;IEC61347- 1, IEC61347-2- 13;AS/NZS 61347- 1, AS/NZS 61347-2- 13;AS 61347.2.13;EN62384; |
| | EMC | GB/T17743, GB17625. 1;EN55015, EN61000-3-2, EN61000-3-3, EN61547;EN55015, EN61000-3-2, EN61000-3-3, EN61547,EN 62493;EN61000-4-5;EN61000-4-2,3,4,5,6,8,11, EN61547 |
| | ErP | Erp2.0 EU 2019/2020 |
| | RoHS | RoHS (2011/65/EU) (EU)2015/863 |
| Note | 1.All parameters not specially mentioned are measured at 230VAC input , full load and 25℃ of ambient temperature.<br>2.Ripple & Noise are measured at 20MHz of bandwidth by using a 300mm twisted pair-wire terminated with a 0.1uF & 47 uF parallel capacitor.<br>3.Switch and dimmer are not recommended to connect between this product output and luminaries.<br>4.The DC input for this product is only used for emergency lighting and applies to functional and safety requirements, EMC is not considered.<br>5.All Eaglerise power supply are complied with EMI regulations. Since they are belong to component and will be installed inside system enclosure. When they are integrated into a system, the EMI characteristics of the system must be re-verified again. | |

## ◆ Model list

| Number | Model number | Output | | | |
|---|---|---|---|---|---|
| | | Current (mA) | Voltage (VDC) | Voltage No load (VDC) | Power (W) |
| 1 | LS-40-600 LI EXC S | 600 | 24-42 | 59 | 25.2 |
| 2 | LS-40-650 LI EXC S | 650 | | | 27.3 |
| 3 | LS-40-700 LI EXC S | 700 | | | 29.4 |
| 4 | LS-40-750 LI EXC S | 750 | | | 31.5 |
| 5 | LS-40-800 LI EXC S | 800 | | | 33.6 |
| 6 | LS-40-850 LI EXC S | 850 | | | 35.7 |
| 7 | LS-40-900 LI EXC S | 900 | | | 37.8 |
| 8 | LS-40-950 LI EXC S | 950 | | | 39.9 |
| 9 | LS-40-1000 LI EXC S | 1000 | 24-40 | | 40 |
| 10 | LS-40-1050 LI EXC S | 1050 | 24-38.5 | | 40.4 |

## ◆ Inrush Current

| Ipeak | Twidth | B10 | B16 | B20 | C10 | C16 | C20 |
|---|---|---|---|---|---|---|---|
| 28.8A | **138μs** | 21pcs | 33pcs | 42pcs | 30pcs | 49pcs | 61pcs |

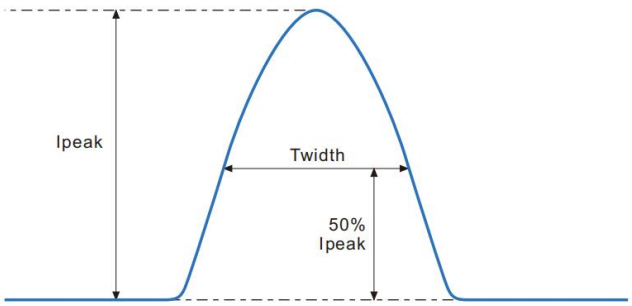


Remarks:

1.The number of drives mounted under different MCBs in the table is the maximum value. Please do not exceed this number during installation.

2.Different brands and models of miniature circuit breakers, the number of drives mounted will be slightly different.

## ◆ Wiring diagram

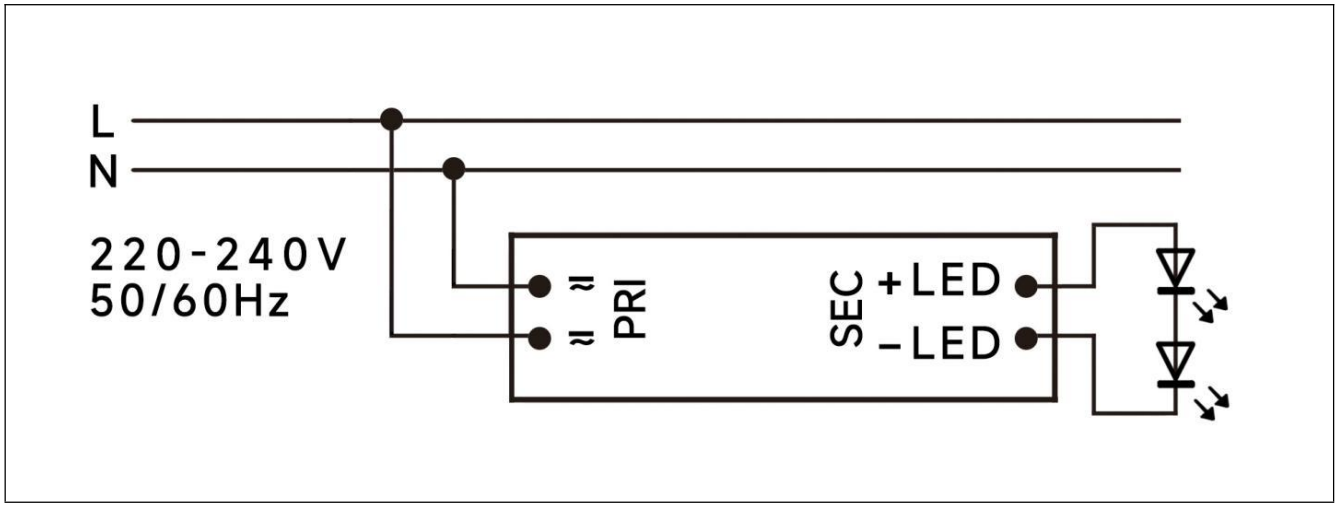

## ◆ 2D diagram

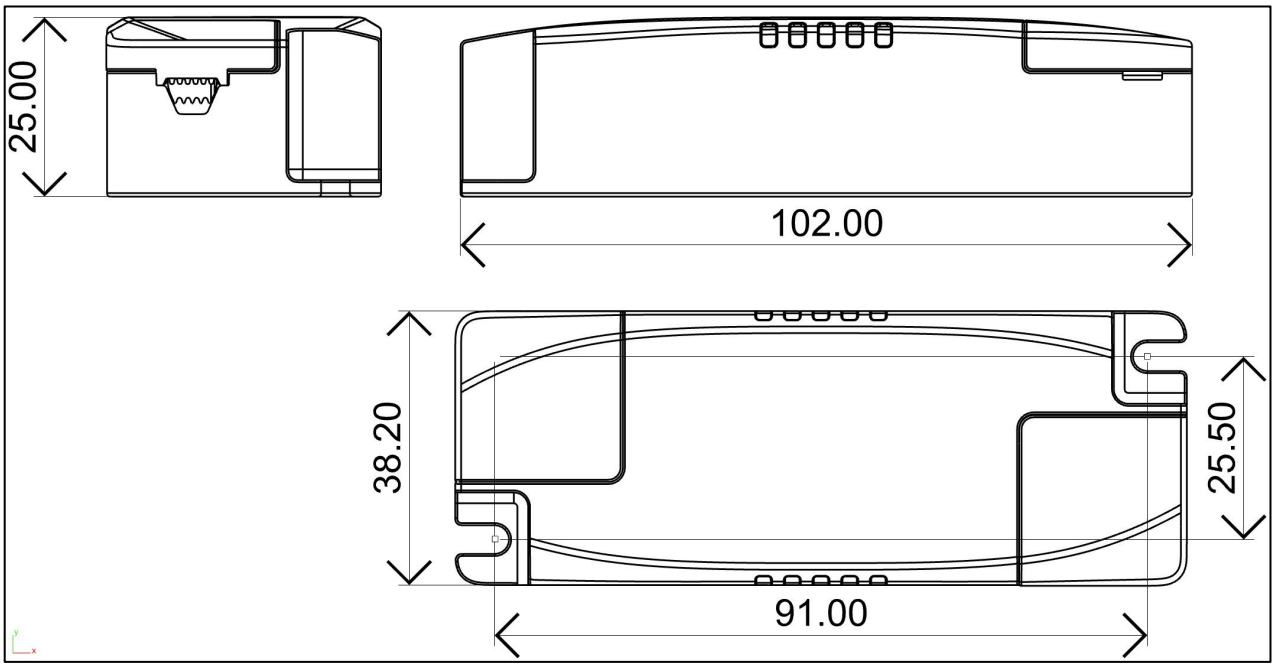


### Terminal

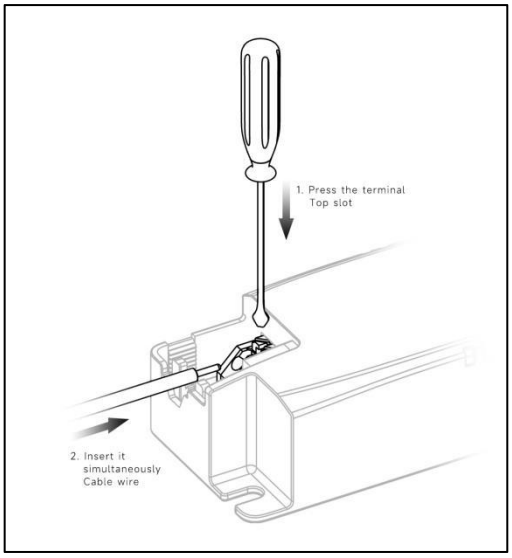

## ◆ Wiring & Connections

| Specification item | | Value （Unit ） |
|---|---|---|
| Input | Input wire cross-section | 0.5...1.5 $mm^2$ |
| | Input wire gauge. | 16...20 AWG |
| | Input wire strip length | 7...9mm |
| Output | Output wire cross-section | 0.5...1.5 $mm^2$ |
| | Output wire gauge. | 16...20 AWG |
| | Output wire strip length | 7...9mm |

Note:Solid wire is risky to use on an angled terminal.Stranded wire is recommended for this kind of use.

## ◆ Curve for LS-40-1050 LI EXC S, Io=1050mA

### Lifetime vs. Temperature Curve

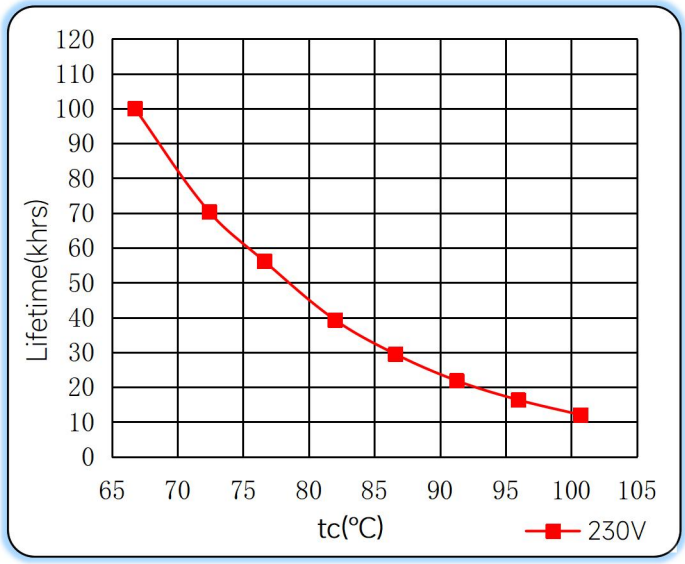


### Efficiency vs. Load

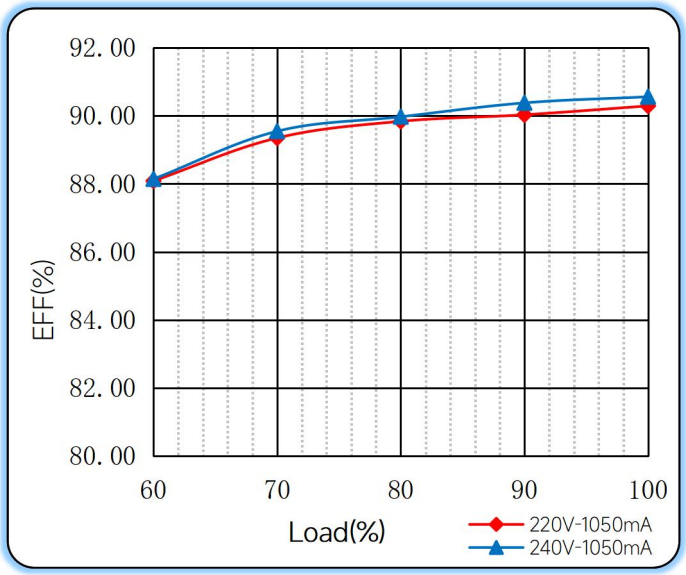


### Power Factor Characteristics

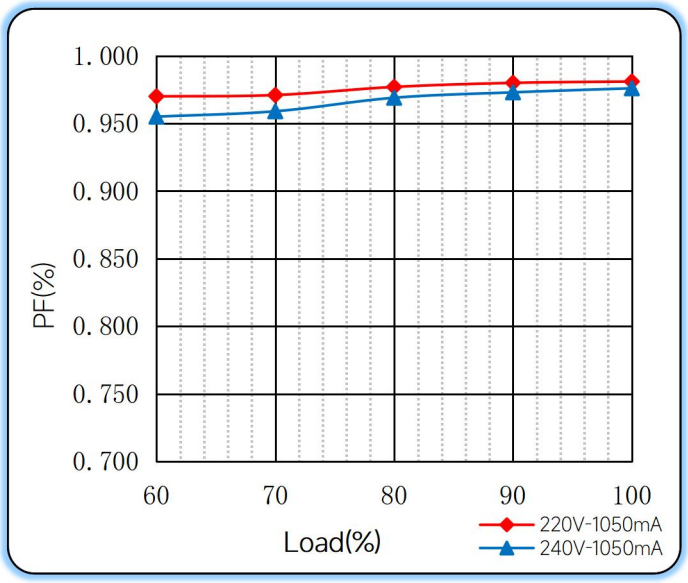


### THD vs. Load

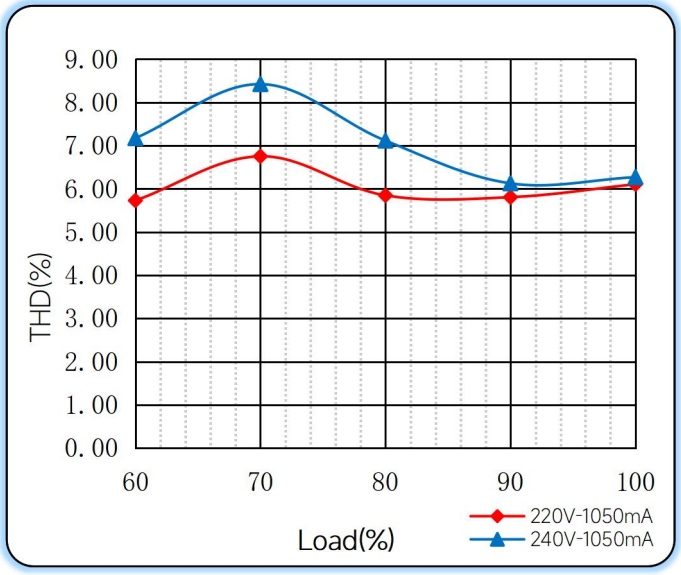

## ◆ Operating window

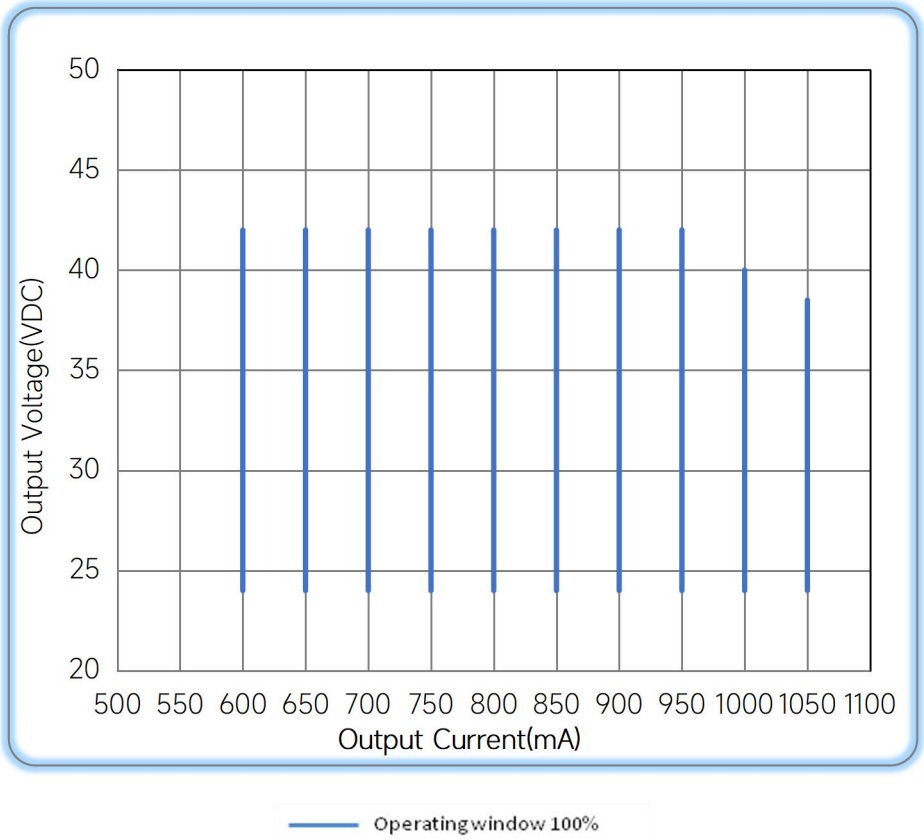


## ◆ Revision Updates

| ITEM | BEFORE | AFTER | VERSION | DATE |
|---|---|---|---|---|
| Initial | | | A | 2023/10/13 |
| PF,Tc | | update | B | 2023/11/23 |
| Over Load Protection | 103-120% | 103-130% | C | 2023/12/26 |

Remark:The final interpretation of the contents of the specification belongs to Eaglerise Electric & Electronic (China) Co., Ltd.