50W Constant Current power supply

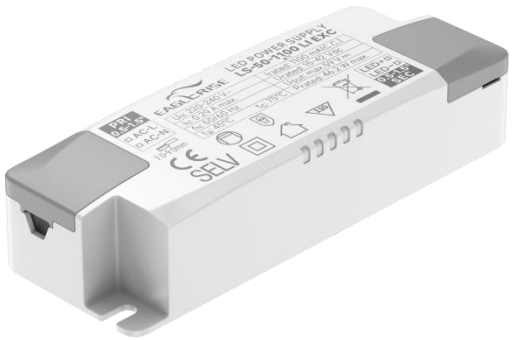

Features

- Class II，SELV，independent
- Input Voltage： 220-240VAC
- Protections：SCP/OLP/OVP
- Power Factor：0.95
- Efficiency：91%
- 5 years warranty
- IP20

Applications

- LED panel、LED down light
  LED spot light

■Approve

CECB

SELV

◆ Description

LS-50-XXX LI EXC is a 50W constant current LED driver with 500 to 1250mA output current. With it's compact dimensions from 116 x 41.2 x 26mm it is easy to integrate in LED Panel, spot and down lights product. To ensure trouble-free operation, protection is provided against output short circuit and over Load.

◆ Model code

LS-50-XXX LI EXC

- Flicker-free
- Current
- Power
- Series

◆ Specification

Output	Constant Current (mA)	500	600	1100	1150	1200	1250
	Voltage Range(VDC)	30-84V		15-42V			15-40V
	Unload voltage Max.	100VDC		59VDC			
	Current Accuracy	±5%					
	Output HF current ripple(≥1KHz)	±3%					
	Output LF current ripple(≤120Hz)	±3%					
	SVM	≤0.4					
	Pst	≤1					
	Efficiency(Typ.)	91%@full load,230V					
Input	Rated input voltage	220-240VAC					
	Range of input voltage	198-264VAC					
	Maximum voltage	300VAC@1 h maximum,unit might not operate in this abnormal condition					
	Frequency(Hz)	50/60 Hz					
	Displacement factor	＞0.95					
	Power Factor	0.95@full load,230V					
	Input Current max (mA)	0.29A					
	Start-up time	＜0.5S					
	No Load Power	≤0.5W					
	THD (Typ.)	<10%@full load,230V					
Protection	Over Load Protection	103-130%					
		YES/Auto Resume					
	Over Voltage Protection	100VDC		59VDC			
		YES/Auto Resume					
	Short circuit Protection	YES/Auto Resume					
capability	Surge capability (L-N)	2KV					
	Surge capability (L/N-Ground)	2KV					
Environment	Operating Temperature	-20℃~+45℃					
	Humidity	20%-90%RH					
	Tc	80℃					
	Storage Temperature	-30℃~+80℃					
	Life time	＞50000h@Tc=80℃					
	Noise	≤20dB(A)@10cm					
Surface	Dimension	116X41.2X26(LXWXH)mm					
	material	PC					
Standards	Safety	GB19510. 1, GB19510. 14;IEC61347- 1, IEC61347-2- 13;EN62384					
	EMC	GB/T17743, GB17625. 1;EN55015, EN61000-3-2, EN61000-3-3, EN61547;EN61000-4-5					
	ErP	Erp2.0 EU 2019/2020					

	RoHS	RoHS (2011/65/EU) (EU)2015/863
Note	1.All parameters not specially mentioned are measured at 230VAC input , full load and 25℃ of ambient temperature. 2.Ripple & Noise are measured at 20MHz of bandwidth by using a 300mm twisted pair-wire terminated with a 0.1uF & 47 uF parallel capacitor. 3.All Eaglerise power supply are complied with EMI regulations. Since they are belong to component and will be installed inside system enclosure. When they are integrated into a system, the EMI characteristics of the system must be re-verified again.	

◆ Model list

Number	Model number	Output			
		Current (mA)	Voltage (VDC)	Voltage No load (VDC)	Power (W)
1	LS-50-500 LI EXC	500	30-84	100	42
2	LS-50-600 LI EXC	600			50.4
3	LS-50-1100 LI EXC	1100	15-42	59	46.2
4	LS-50-1150 LI EXC	1150			48.3
5	LS-50-1200 LI EXC	1200			50.4
6	LS-50-1250 LI EXC	1250	15-40		50

◆ Inrush Current

I_{peak}	T_{width}	B10	B16	B20	C10	C16	C20
33.6A	**148μs**	16pcs	26pcs	33pcs	27pcs	44pcs	55pcs

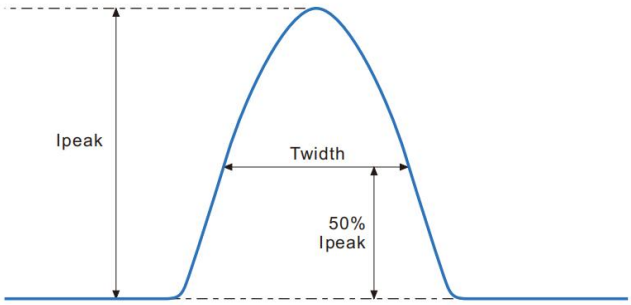

Remarks:
1.The number of drives mounted under different MCBs in the table is the maximum value. Please do not exceed this number during installation.
2.Different brands and models of miniature circuit breakers, the number of drives mounted will be slightly different.

◆ Wiring diagram

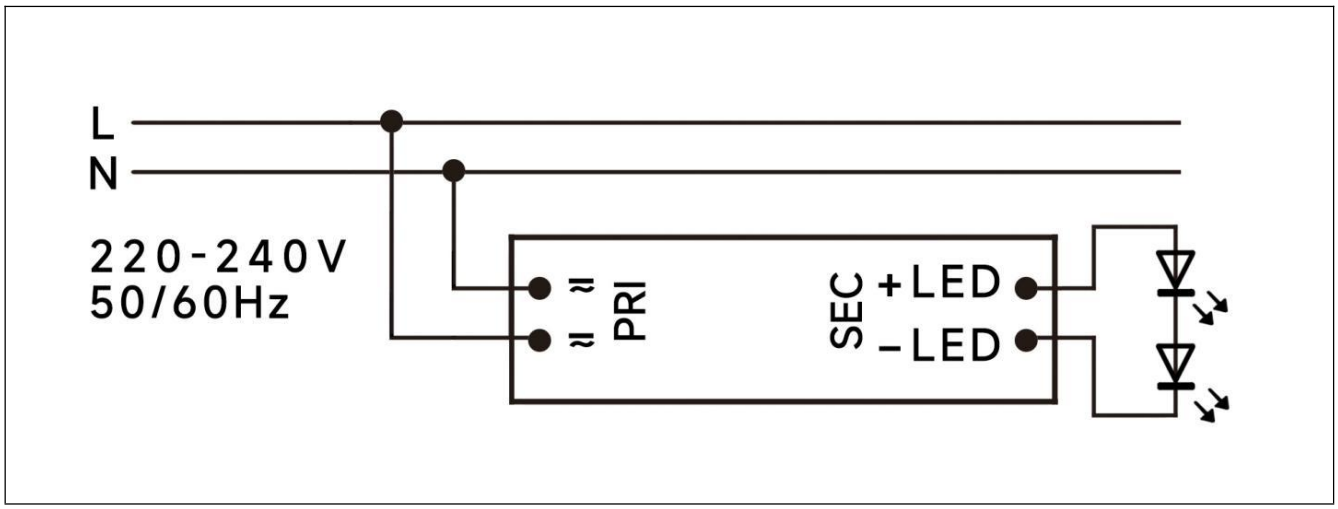

◆ 2D diagram

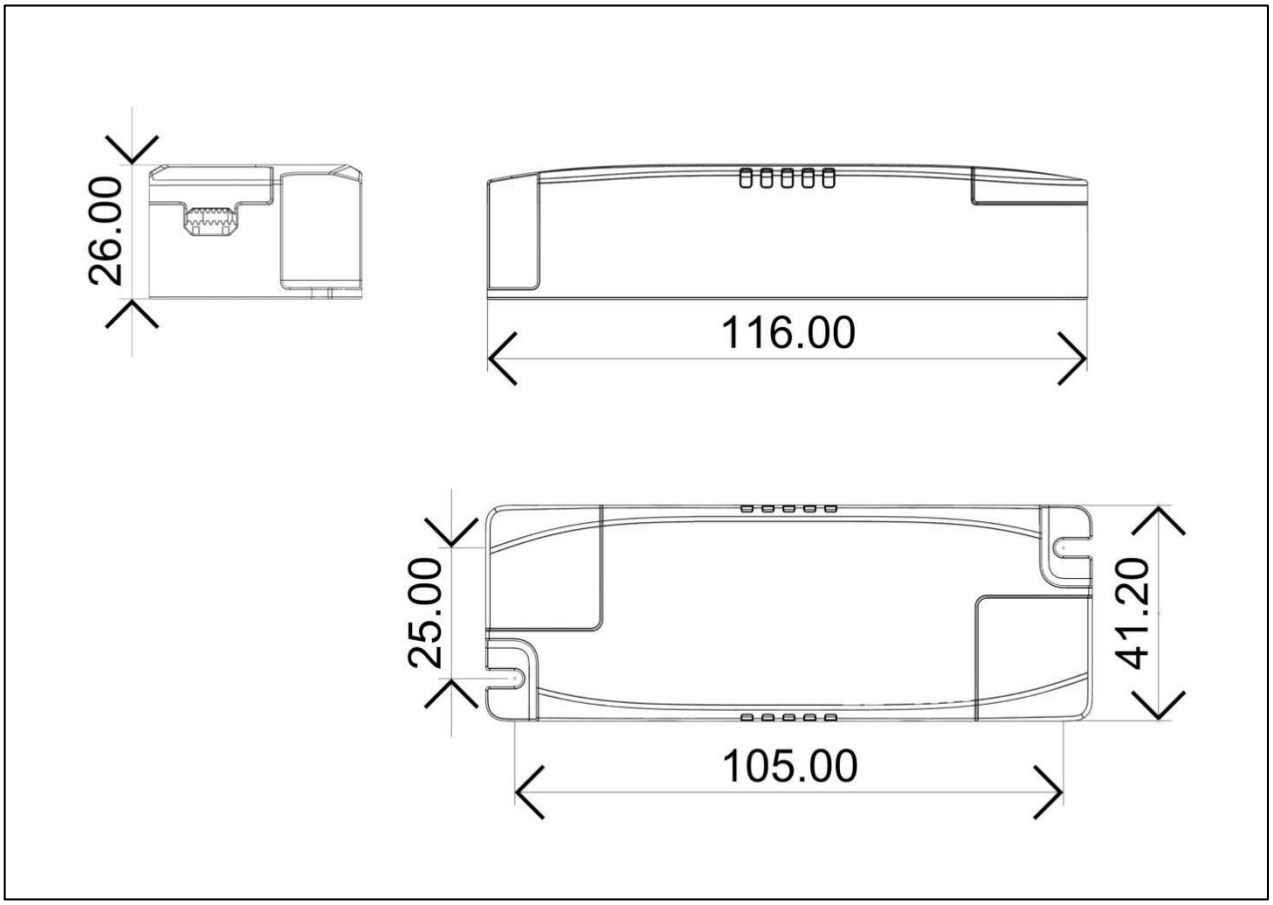

Termina

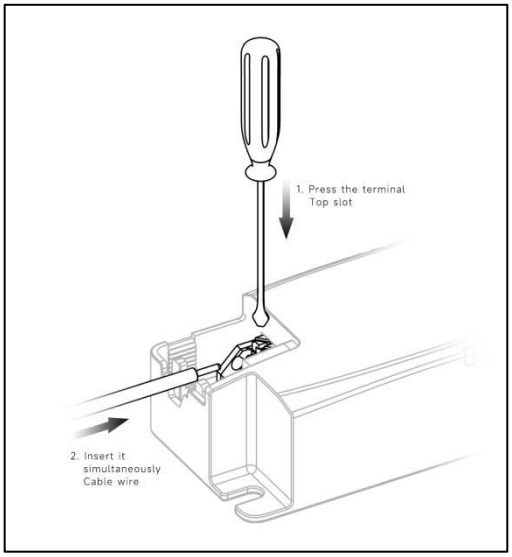

◆ Wiring & Connections

Specification item		Value （Unit ）
Input	Input wire cross-section	0.5...1.5 mm^2
	Input wire gauge.	16...20 AWG
	Input wire strip length	7...9mm
Output	Output wire cross-section	0.5...1.5 mm^2
	Output wire gauge.	16...20 AWG
	Output wire strip length	7...9mm

◆ Recommended wire

Wire cross-section	Wire type
2*0.5mm^2	H03VVH2-F 2core
2*0.75mm^2	H03VVH2-F 2core
1.5mm^2	CCC 08(RV-90)
16AWG(1.25mm^2)	UL1015

Note:Solid wire is risky to use on an angled terminal.Stranded wire is recommended for this kind of use.

.

◆ Curve for LS-50-1250 LI EXC, Io=1250mA

Lifetime vs. Temperature Curve

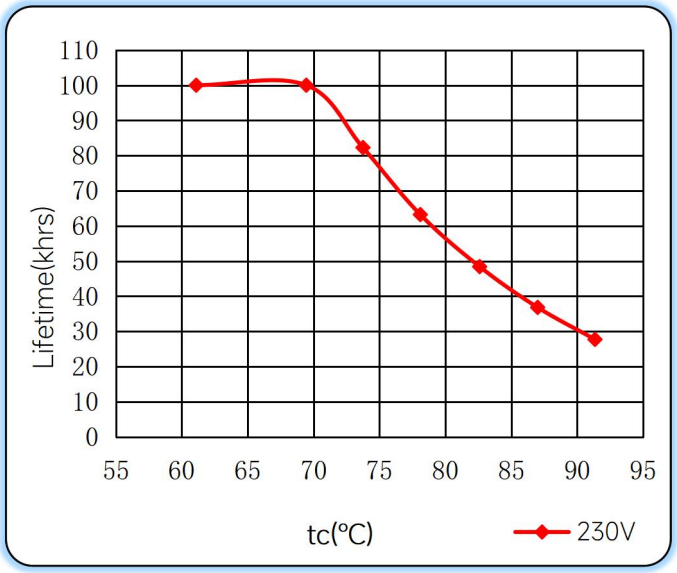

Efficiency vs. Load

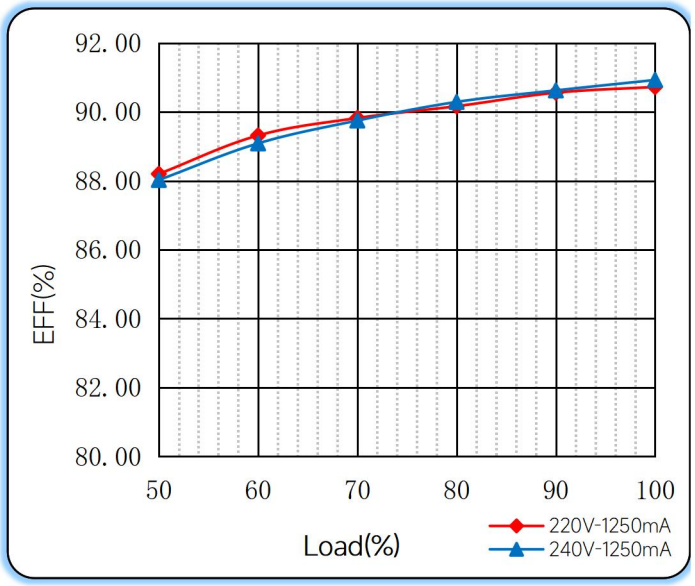

Power Factor Characteristics

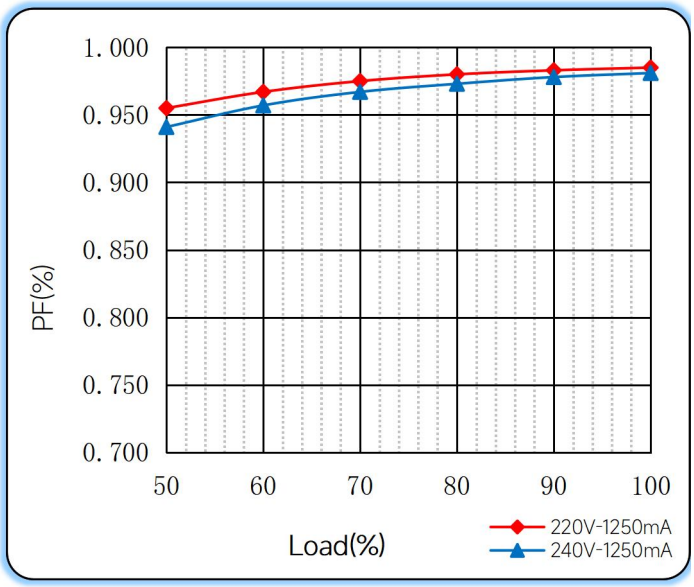

THD vs. Load

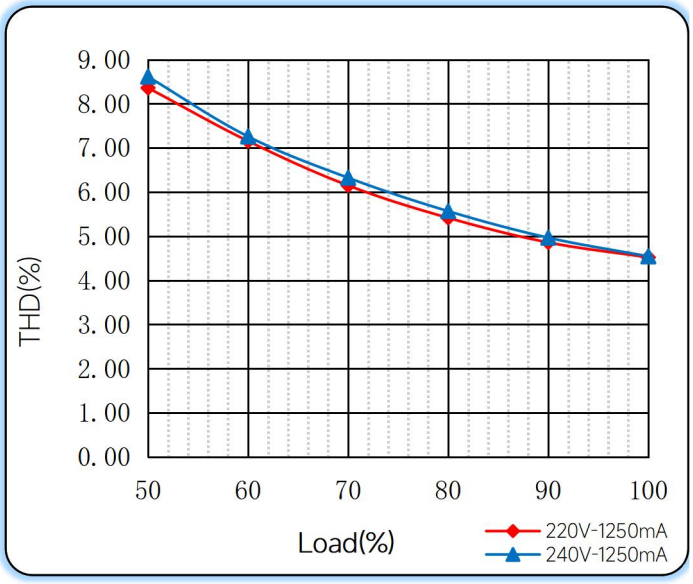

◆ Operating window

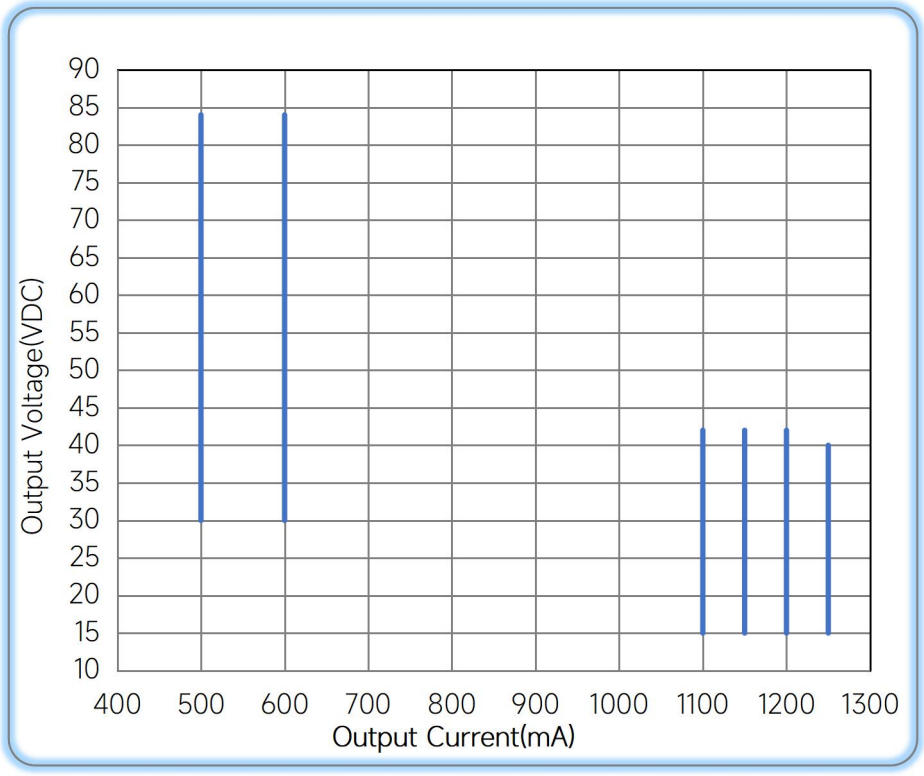

Operating window 100%

◆ Revision Updates

ITEM	BEFORE	AFTER	VERSION	DATE
Initial			A	2023/10/13
PF,Tc		update	B	2023/11/23

Remark:The final interpretation of the contents of the specification belongs to Eaglerise Electric & Electronic (China) Co., Ltd.