60W Constant Current power supply

Features

- For luminaries of protection Class II, SELV, independent
- Input Voltage: 220-240VAC
- Protections: SCP/OLP/OVP
- Power Factor: ≥0.95
- Efficiency: 90%
- 5 years warranty
- IP20

Applications

- LED panel、LED down light

■Approve

CE CB EAC

SELV

◆ Description

LS-60-XXX LI EXC is a 60W constant current LED driver with 1300 to 1500mA output current. With it's compact dimensions from 135 x 41.2 x 25mm it is easy to integrate in LED Panel, spot and down lights product. To ensure trouble-free operation, protection is provided against output short circuit and over Load.

◆ Model code

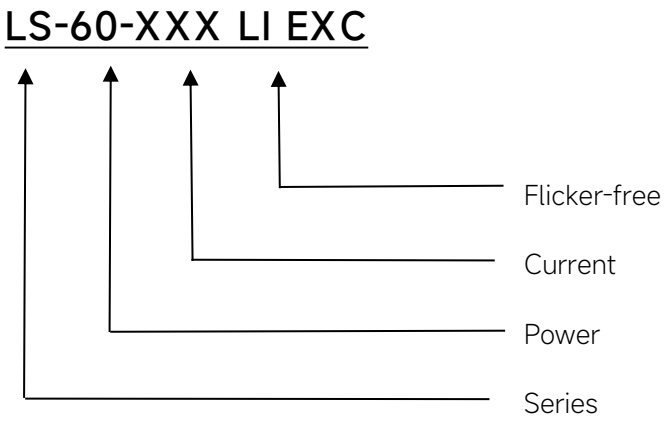

◆ Specification

Output	Constant Current (mA)	1300	1350	1400	1450	1500
	Voltage Range(VDC)	15-42V			15-40V	
	Unload voltage Max.	59VDC				
	Current Accuracy	±5%				
	Output HF current ripple(≥1KHz)	±3%				
	Output LF current ripple(≤120Hz)	±3%				
	SVM	≤0.4				
	Pst	≤1				
	Efficiency(Typ.)	90%@full load,230V				
Input	Rated input voltage	220-240VAC				
	Range of input voltage	198-264VAC				
	Maximum voltage	300VAC@1 h maximum,unit might not operate in this abnormal condition				
	Frequency(Hz)	50/60 Hz				
	Displacement factor	＞0.95				
	Power Factor	≥0.95@full load,230V				
	Input Current max (mA)	0.38A				
	Start-up time	＜0.5S				
	No Load Power	≤0.5W				
	THD (Typ.)	<10%@full load,230V				
Protection	Over Load Protection	103-130%				
		YES/Auto Resume				
	Over Voltage Protection	59VDC				
		YES/Auto Resume				
	Short circuit Protection	YES/Auto Resume				
capability	Surge capability (L-N)	2KV				
	Surge capability (L/N-Ground)	NA				
Environment	Operating Temperature	-20℃~+45℃				
	Humidity	20%-90%RH				
	Tc	90℃				
	Storage Temperature	-30℃~+80℃				
	Life time	＞50000h@Tc=80℃				
	Noise	≤20dB(A)@10cm				
Surface	Dimension	135X41.2X25(LXWXH)mm				
	material	PC				
Standards	Safety	GB19510. 1, GB19510. 14;IEC61347- 1, IEC61347-2- 13;AS/NZS 61347- 1, AS/NZS 61347-2- 13;AS 61347.2.13;EN62384;				
	EMC	GB/T17743, GB17625. 1;EN55015, EN61000-3-2, EN61000-3-3, EN61547;EN55015, EN61000-3-2, EN61000-3-3, EN61547,EN				

	ErP	Erp2.0 EU 2019/2020
	RoHS	RoHS (2011/65/EU) (EU)2015/863
Note	1.All parameters not specially mentioned are measured at 230VAC input , full load and 25℃ of ambient temperature. 2.Ripple & Noise are measured at 20MHz of bandwidth by using a 300mm twisted pair-wire terminated with a 0.1uF & 47 uF parallel capacitor. 3.Switch and dimmer are not recommended to connect between this product output and luminaries.	

◆ Model list

Number	Model number	Output			
		Current (mA)	Voltage (VDC)	Voltage No load (VDC)	Power (W)
1	LS-60-1300 LI EXC	1300	15-42V	59	54.6
2	LS-60-1350 LI EXC	1350			56.7
3	LS-60-1400 LI EXC	1400			58.8
4	LS-60-1450 LI EXC	1450	15-40V		58
5	LS-60-1500 LI EXC	1500			60

◆ Inrush Current

I^{peak}	Twidth	B10	B16	B20	C10	C16	C20
35A	**208μs**	11pcs	17pcs	22pcs	18pcs	29pcs	37pcs

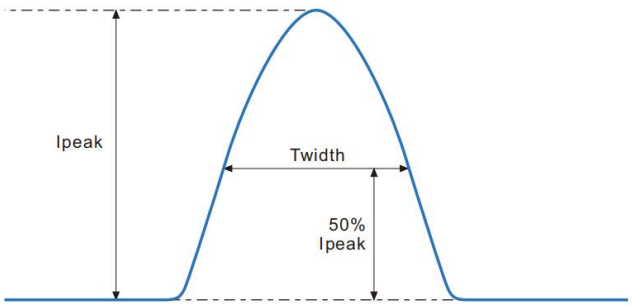

Remarks:
1.The number of drives mounted under different MCBs in the table is the maximum value. Please do not exceed this number during installation.
2.Different brands and models of miniature circuit breakers, the number of drives mounted will be slightly different.

◆ Wiring diagram

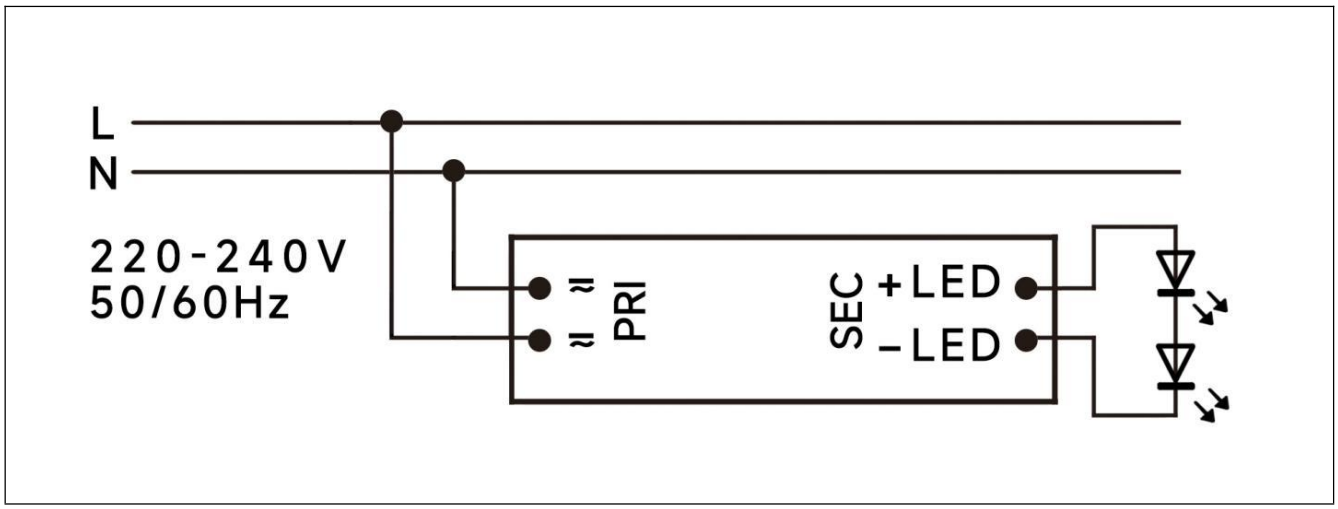

◆ 2D diagram

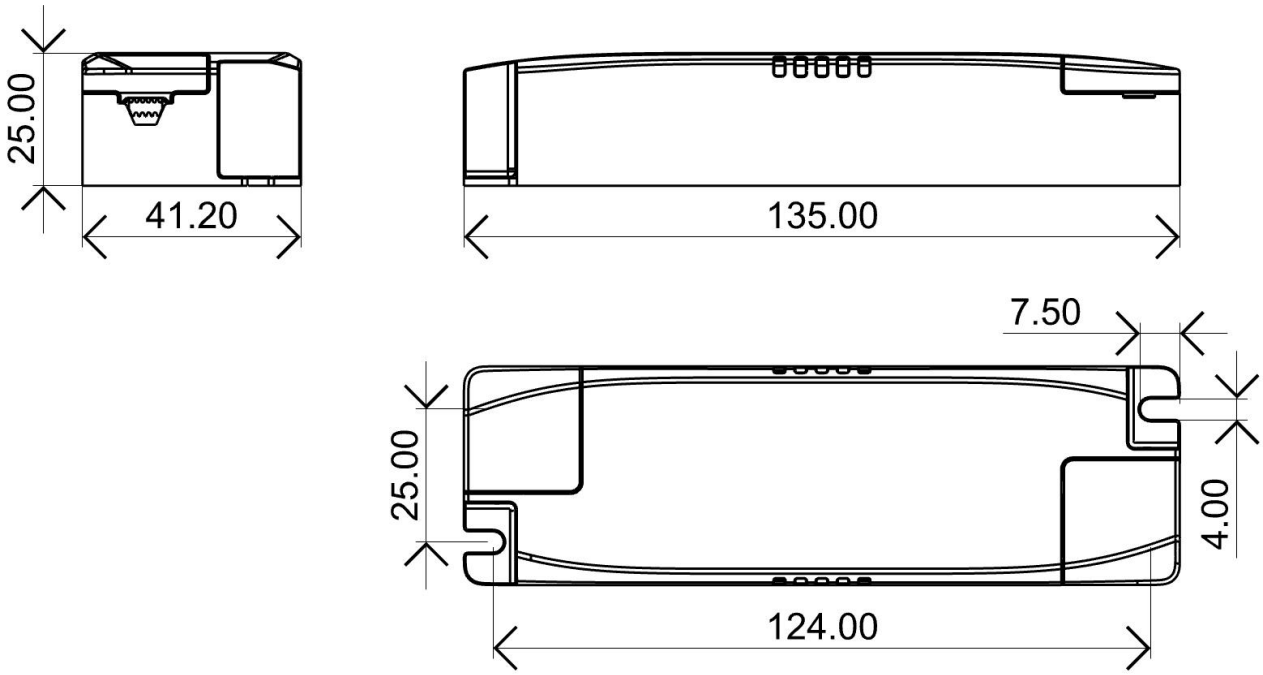

Terminal

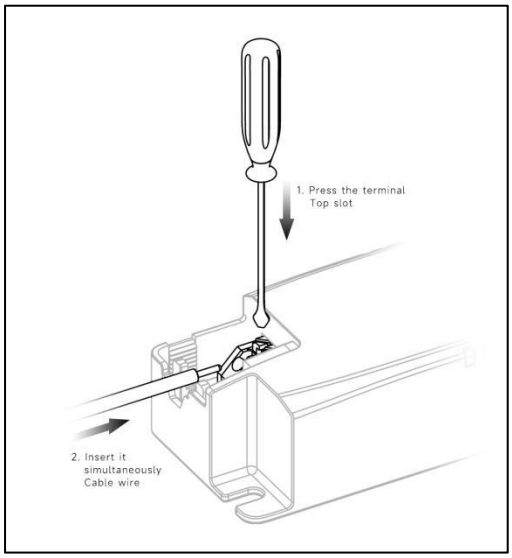

◆ Wiring & Connections

Specification item		Value （Unit ）
Input	Input wire cross-section	0.5...1.5 mm^2
	Input wire gauge.	16...20 AWG
	Input wire strip length	7...9mm
Output	Output wire cross-section	0.5...1.5 mm^2
	Output wire gauge.	16...20 AWG
	Output wire strip length	7...9mm

◆ Recommended wire

Wire cross-section	Wire type
2*0.5mm^2	H03VVH2-F 2core
2*0.75mm^2	H03VVH2-F 2core
1.5mm^2	CCC 08(RV-90)
16AWG(1.25mm^2)	UL1015

Note:Solid wire is risky to use on an angled terminal.Stranded wire is recommended for this kind of use.

◆ Curve for LS-60-1500 LI1 EXC, Io=1500mA

Lifetime vs. Temperature Curve

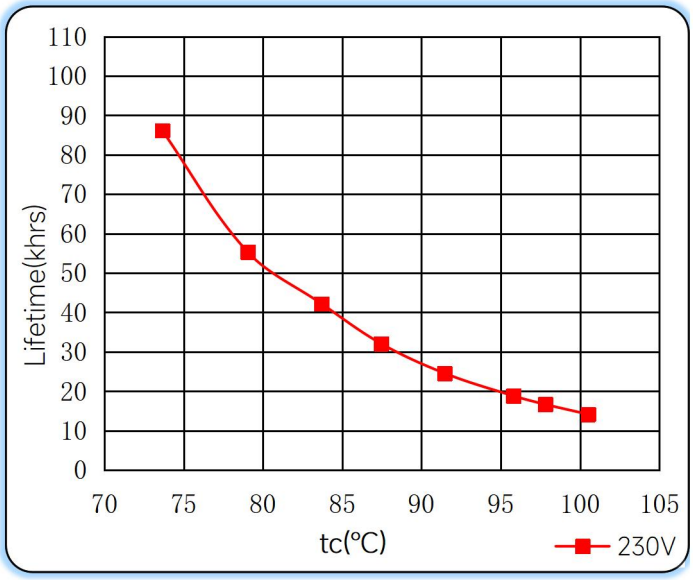

Efficiency vs. Load

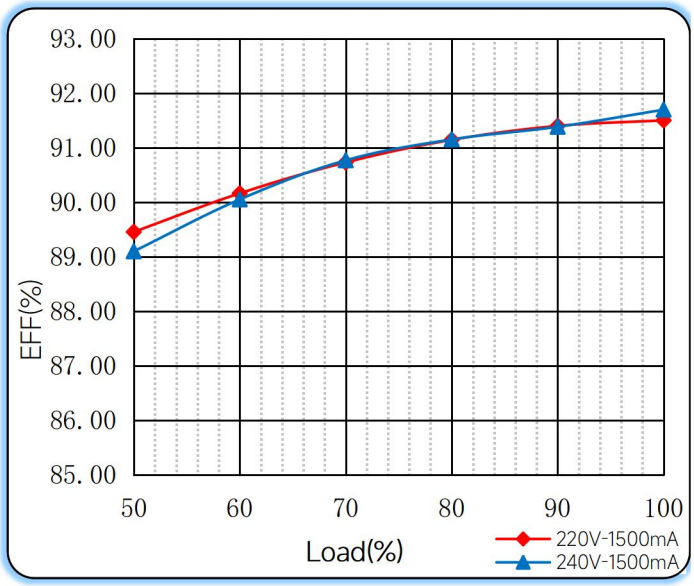

Power Factor Characteristics

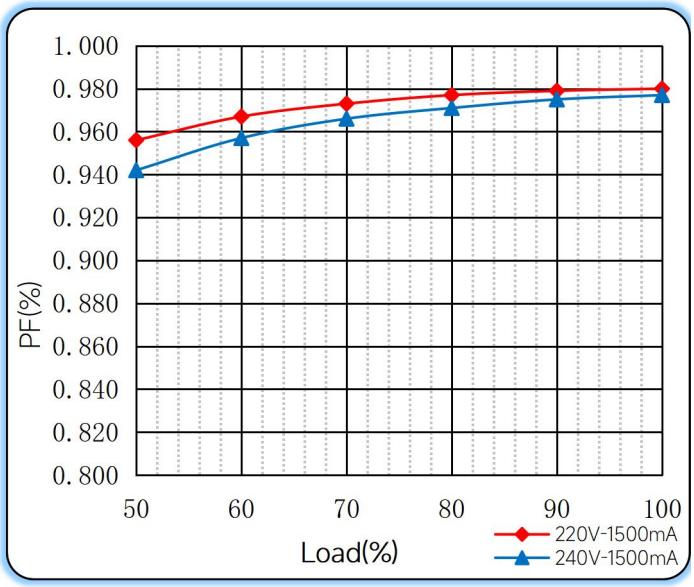

THD vs. Load

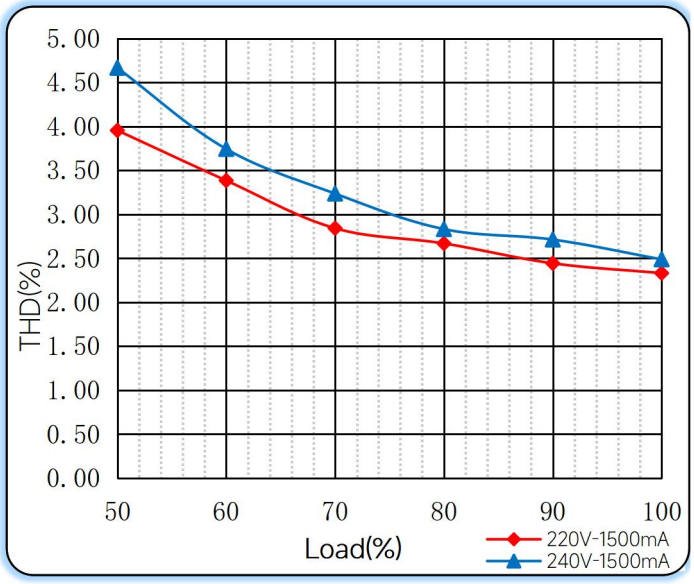

◆ Operating window

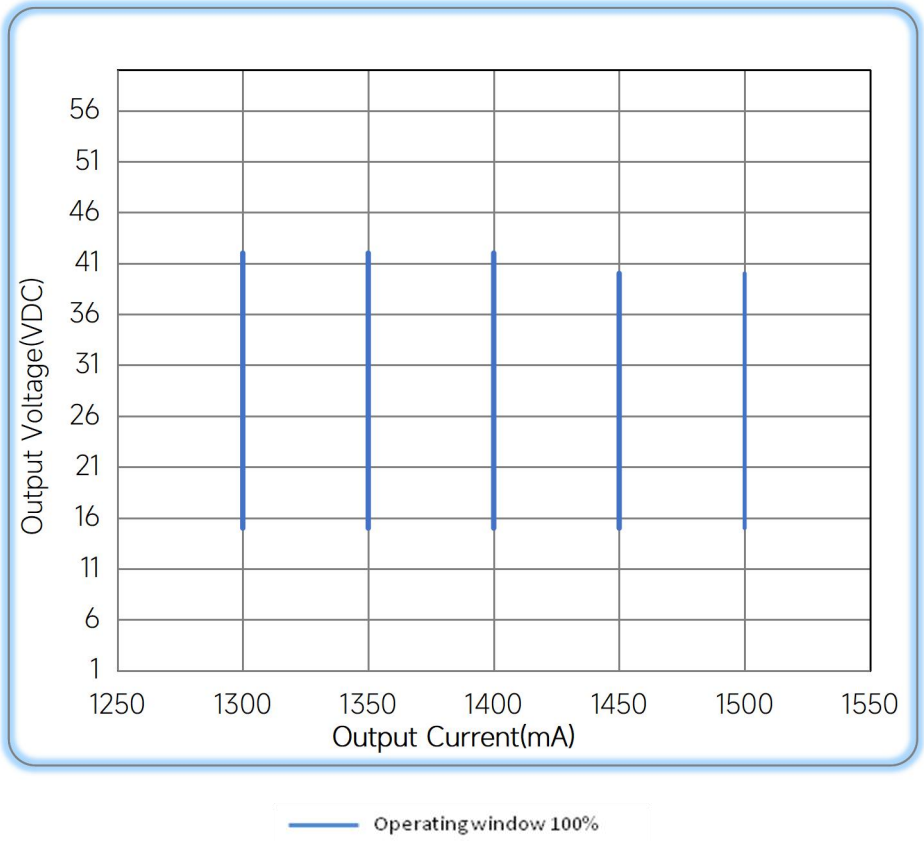

◆ Revision Updates

ITEM	BEFORE	AFTER	VERSION	DATE
Initial			A	2023/11/23

Remark:The final interpretation of the contents of the specification belongs to Eaglerise Electric & Electronic (China) Co., Ltd.