8W Constant Current power supply

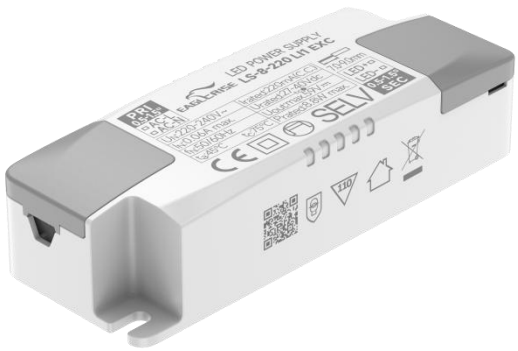

Features

- For luminaries of protection Class II, SELV, independent
- Input Voltage 220-240VAC
- Protections: SCP/OLP/OVP/OTP
- Power Factor :0.95
- Efficiency: 68-80%
- 5 years warranty

Applications

- LED panel、LED down light
  LED spot light

■**Approve**

CE CB EAC CCC SELV

◆ Description

LS-8-XXX LI1 EXC is a 8W constant current LED driver that operates from 198-264Vac input with 70 to 220mA output current. With it's compact dimensions from 92 x 36 x 25mm it is easy to integrate in LED Panel, spot, down lights. To ensure trouble-free operation, protection is provided against output short circuit and over Load.

◆ Model code

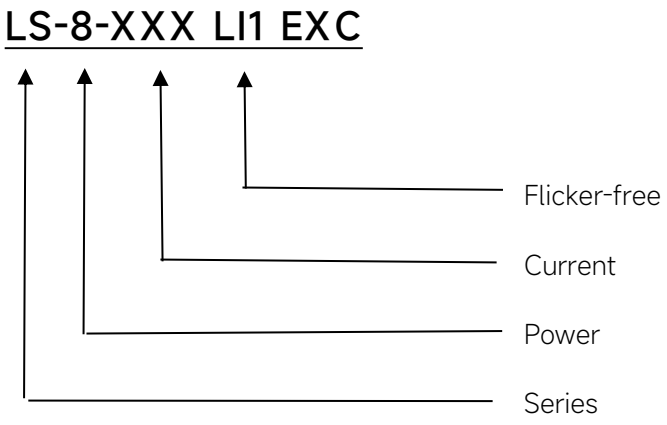

◆ Specification

Output	Constant Current (mA)	70	120	150	160	180	200	220
	Voltage Range(VDC)	27-42					27-40	
	Unload voltage Max.(VDC))	59V						
	Current Accuracy	±10%	±7%				±5%	
	Output HF current ripple(≥1KHz)	±5%						
	Output LF current ripple(≤120Hz)	±3%						
	SVM	≤0.4						
	P_{st}	≤1						
	Efficiency(Typ.)	68%	76%	78%		79%	80%	
Input	Rated input voltage	220-240VAC						
	Range of input voltage	198-264VAC						
	Maximum voltage	300VAC@1 h maximum,unit might not operate in this abnormal condition						
	Frequency(Hz)	50/60 Hz						
	Displacement factor(Typ.)	≥0.9						
	Power Factor	0.9	0.92	0.95				
	Input Current max	0.025A	0.038A	0.046A	0.048A	0.053A	0.058A	0.06A
	Start-up time	< 0.5S						
	No Load Power	≤0.5W						
	THD (Typ.)	< 20%					< 10%	
Protection	Over Load Protection	103-130%						
		YES/Auto Resume						
	Over Voltage Protection	59VDC						
		YES/Auto Resume						
	Short circuit Protection	YES/Auto Resume						
capability	Surge capability (L-N)	1KV						
	Surge capability (L/N-Ground)	NA						
Environment	Operating Temperature	-20℃~+45℃						
	Humidity	10%-90%RH						
	Tc	75℃						
	Storage Temperature	-25℃~+60℃						
	Life time	> 50000h@Tc=75℃						
	Noise	≤20dB(A)@10cm						
Surface	Dimension	92x36x25mm						
	material	PC						
Standards	Safety	GB19510. 1, GB19510. 14;IEC61347- 1, IEC61347-2- 13;EN61347- 1, EN61347-2-13;EN62384						
	EMC	GB/T17743, GB17625. 1;EN55015, EN61000-3-2, EN61000-3-3, EN61547;EN61000-4-5;EN61000-4-2,3,4,5,6,8,11						

	Energy Efficiency	Erp2.0 EU 2019/2020
	RoHS	RoHS (2011/65/EU) (EU)2015/863
Note	1.All parameters not specially mentioned are measured at 230VAC input , full load and 25℃ of ambient temperature. 2.Ripple & Noise are measured at 20MHz of bandwidth by using a 300mm twisted pair-wire terminated with a 0.1uF & 47 uF parallel capacitor. 3.Switch and dimmer are not recommended to connect between this product output and luminaries. 4.The over-temperature protection of the product is provided by the IC. 5.All Eaglerise power supply are complied with EMI regulations. Since they are belong to component and will be installed inside system enclosure. When they are integrated into a system, the EMI characteristics of the system must be re-verified again.	

◆ Model list

Number	Model number	Input			Output			
		Voltage (VAC)	Current (A)	Frequency (Hz)	Current (mA)	Voltage (VDC)	Voltage No load (VDC)	Power (W)
1	LS-8-70 LI1 EXC	220-240	0.025	50/60	70	27-42	59	3
2	LS-8-120 LI1 EXC		0.038		120			5
3	LS-8-150 LI1 EXC		0.046		150			6.3
4	LS-8-160 LI1 EXC		0.048		160			6.7
5	LS-8-180 LI1 EXC		0.053		180			7.6
6	LS-8-200 LI1 EXC		0.058		200	27-40		8
7	LS-8-220 LI1 EXC		0.06		220			8.8

◆ Inrush Current

I^{peak}	Twidth	B10	B16	B20	C10	C16	C20
6.76A	**122μs**	102pcs	163pcs	204pcs	133pcs	213pcs	266pcs

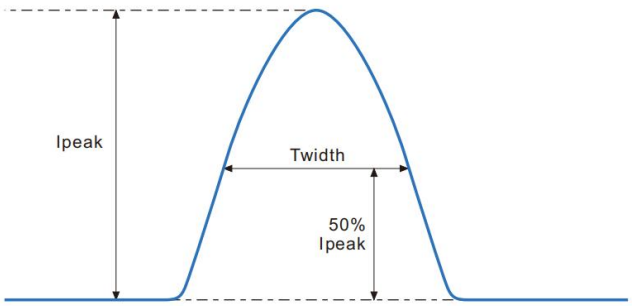

Remarks:

1.The number of drives mounted under different MCBs in the table is the maximum value. Please do not exceed this number during installation.

2.Different brands and models of miniature circuit breakers, the number of drives mounted will be slightly different.

◆ Wiring diagram

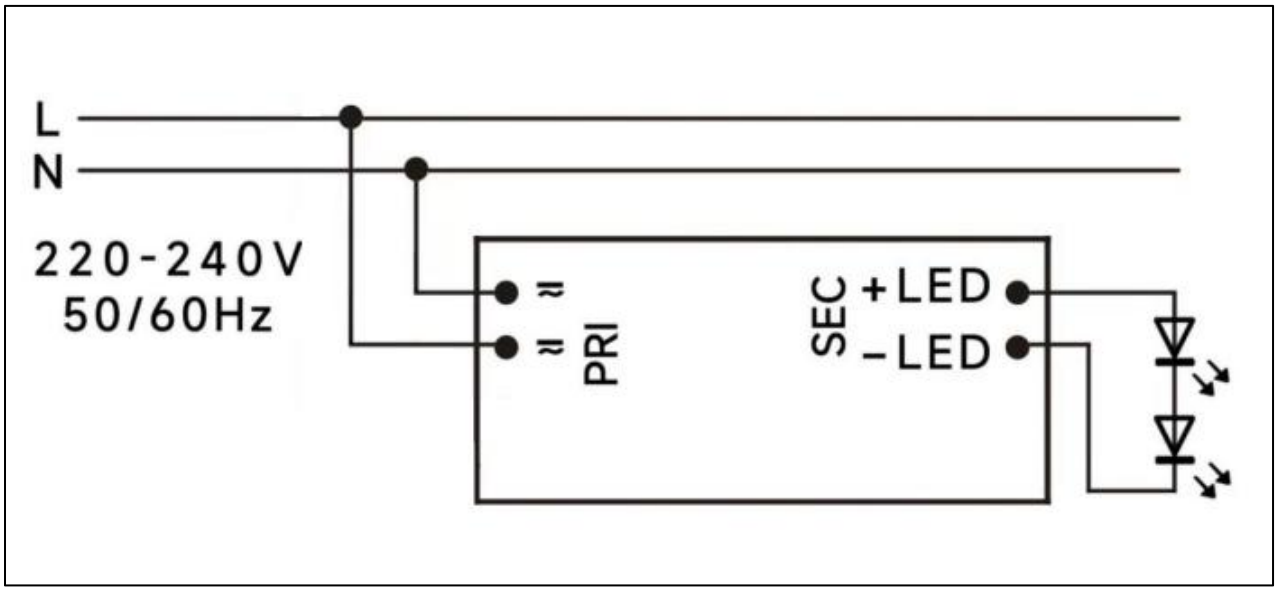

◆ 2D diagram

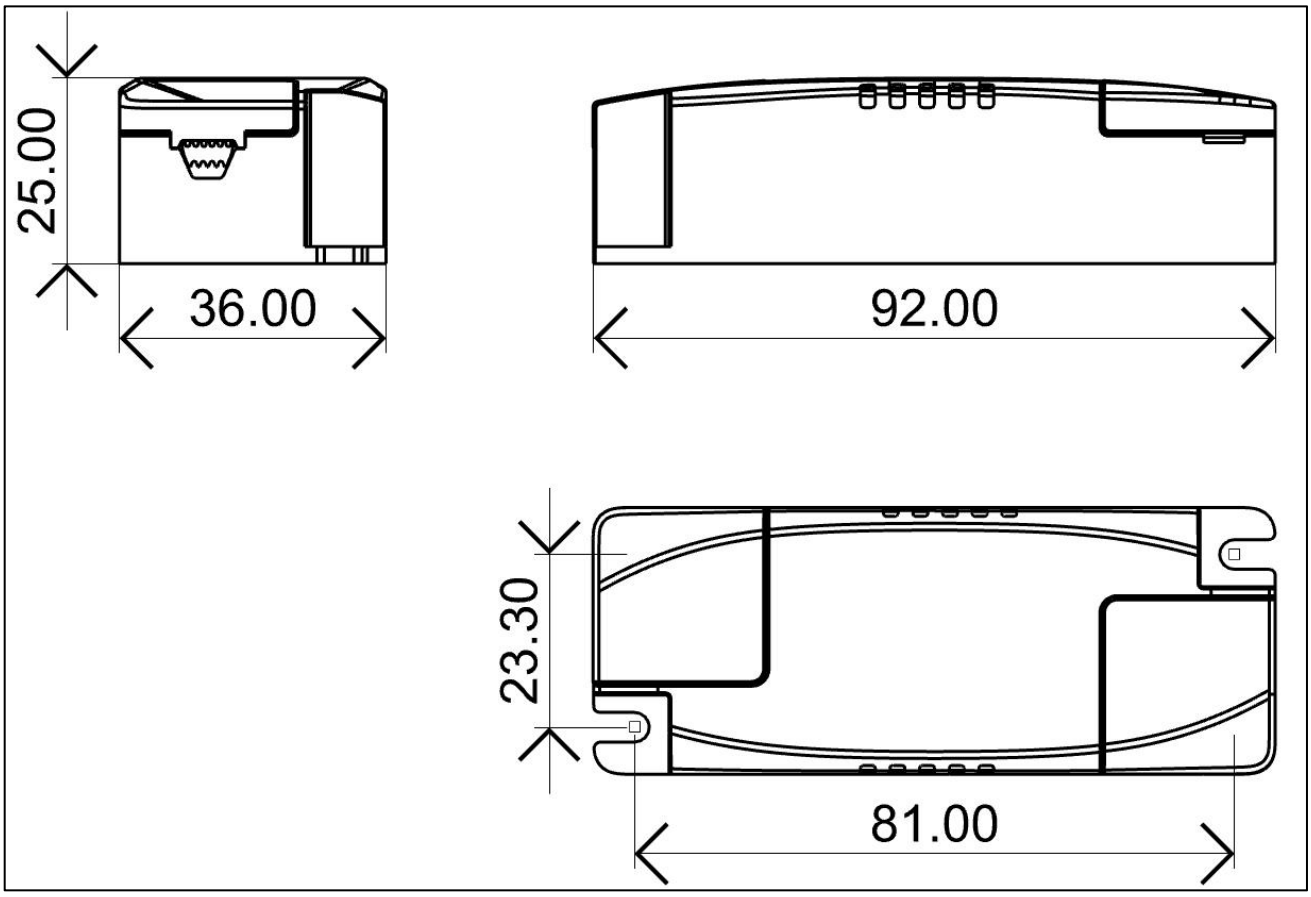

Terminal

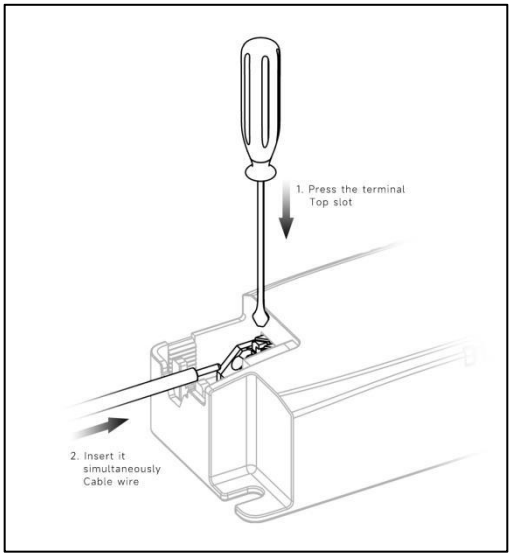

◆ Wiring & Connections

Specification item		Value （Unit ）
Input	Input wire cross-section	0.5...1.5 mm^2
	Input wire gauge.	16...20 AWG
	Input wire strip length	7...9mm
Output	Output wire cross-section	0.5...1.5 mm^2
	Output wire gauge.	16...20 AWG
	Output wire strip length	7...9mm

◆ Recommended wire

Wire cross-section	Wire type
2*0.5mm^2	H03VVH2-F 2core
2*0.75mm^2	H03VVH2-F 2core
1.5mm^2	CCC 08(RV-90)
16AWG(1.25mm^2)	UL1015

Note:Solid wire is risky to use on an angled terminal.Stranded wire is recommended for this kind of use.

◆ Curve for LS-8-200 LI1 EXC, Io=200mA

Lifetime vs. Temperature Curve

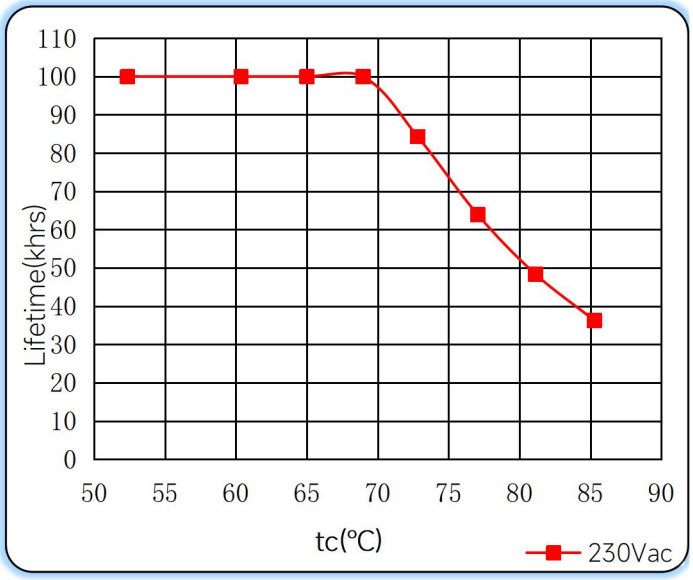

Efficiency vs. Load

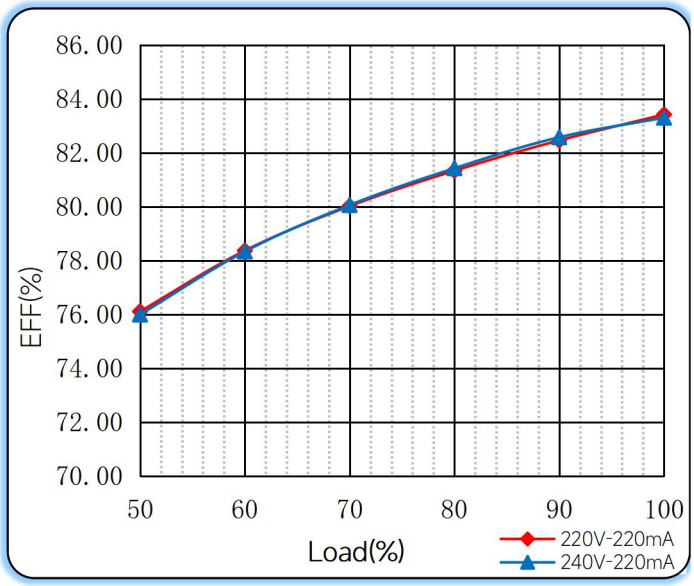

Power Factor Characteristics

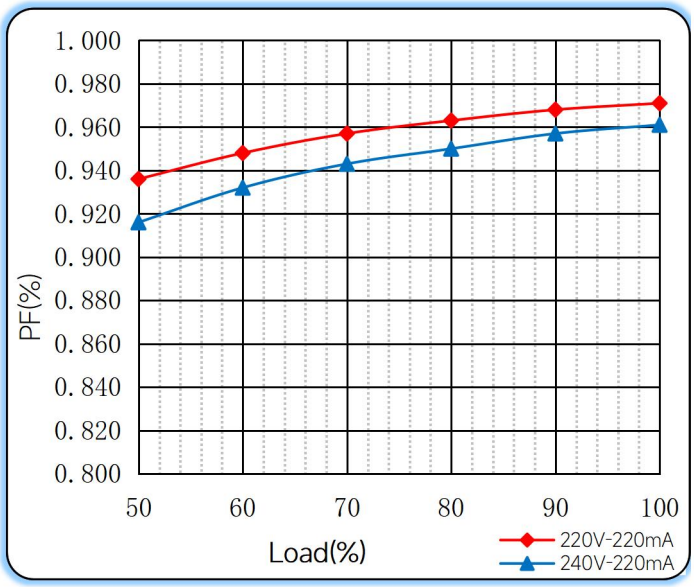

THD vs. Load

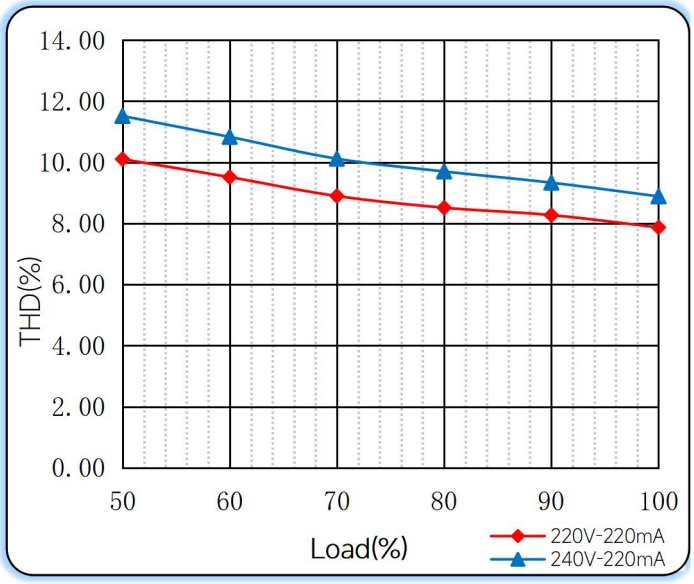

◆ Operating window

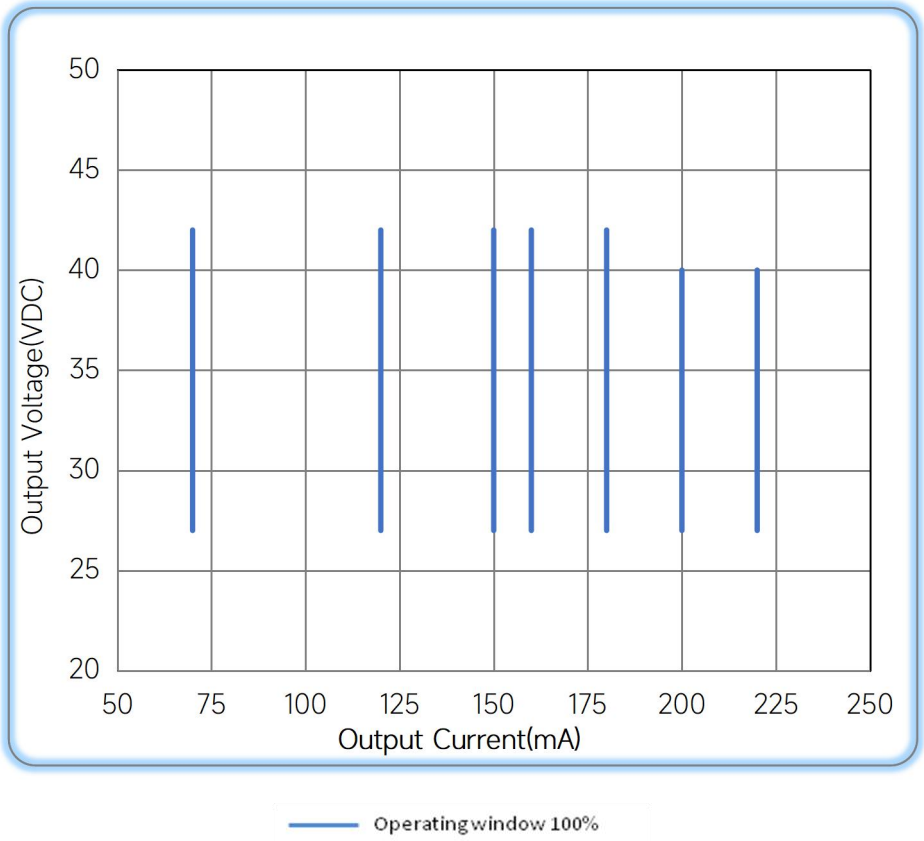

◆ Revision Updates

ITEM	BEFORE	AFTER	VERSION	DATE
Initial			A	2024/01/09

Remark:The final interpretation of the contents of the specification belongs to Eaglerise Electric & Electronic (China) Co., Ltd.