8W Constant Current power supply

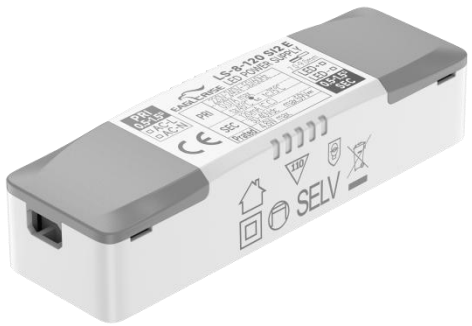

■**Approve**

Features

- Class II, SELV, Independent
- Input Voltage: 220-240VAC
- Protections: SCP/OLP/OVP/OTP
- Power Factor: 0.6C
- Efficiency: ≥78%@70-80mA
  ≥80%@≥100mA
- 5 years warranty
- IP20

Applications

- LED panel、LED down light
  LED spot light

◆ Description

LS-8-XXX SI2 E is a 8W constant current LED driver with 70-700mA output current. With it's compact dimensions from 92 x 28 x 21 mm.It is easy to integrate in LED panel、LED down light、LED spot light products. To ensure trouble-free operation, protection is provided against output short circuit and over Load.

◆ Model code

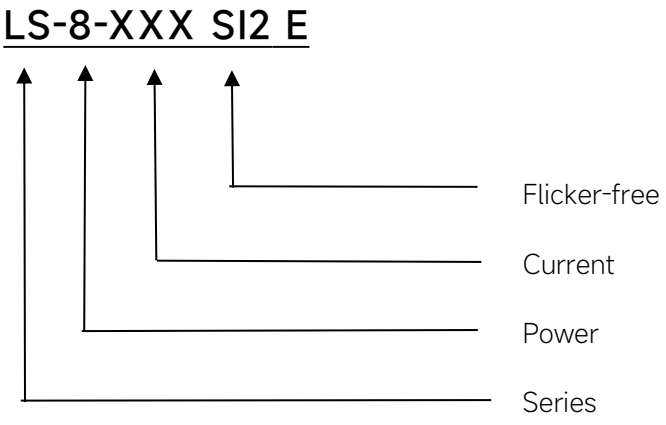

◆ Specification

Output	Constant Current (mA)	70	80	100	120	150	160	180	...	700
	Voltage Range(VDC)	30-40							...	8-11.4
	Unload voltage Max.(VDC)	59							...	28
	Current Accuracy	±10%				±7%	±7%	±7%	±5%	
	Output HF current ripple(≥1KHz)	±5%								
	Output LF current ripple(≤120Hz)	±5%								
	SVM	≤0.4								
	P_{st}	≤1								
	Efficiency(Typ.)	≥78%		≥80%						
Input	Rated input voltage	220-240VAC								
	Range of input voltage	198-264VAC								
	Frequency(Hz)	50/60 Hz								
	Displacement factor	≥0.7								
	Power Factor	0.6C@full load,230V								
	Input Current max (mA)	30	40	50	70	80	90	100	...	110
	Start-up time	< 0.5S								
	No Load Power	≤0.5W								
Protection	Over Load Protection	103-135%								
		YES/Auto Resume								
	Over Voltage Protection	59V								
		YES/Auto Resume								
	Short circuit Protection	YES/Auto Resume								
capability	Surge capability (L-N)	1KV								
	Surge capability (L/N-Ground)	NA								
Environment	Operating Temperature	-20℃~+45℃								
	Humidity	20%-90%RH								
	Tc	75℃								
	Storage Temperature	-20℃~+60℃								
	Life time	> 50,000h@Tc=65℃(> 50,000h@Tc=65℃@220mA)								
	Noise	≤20dB(A)@10cm								
Surface	Dimension	92X28X21 (LXWXH)mm								
	material	PP								
Standards	Safety	GB19510. 1, GB19510. 14;IEC61347- 1, IEC61347-2- 13;AS/NZS 61347- 1, AS/NZS 61347-2- 13;AS 61347.2.13;EN62384;								
	EMC	GB/T17743, GB17625. 1;EN55015, EN61000-3-2, EN61000-3-3, EN61547;EN55015, EN61000-3-2, EN61000-3-3, EN61547,EN 62493;EN61000-4-5;EN61000-4-2,3,4,5,6,8,11, EN61547								
	ErP	Erp2.0 EU 2019/2020								
	RoHS	RoHS (2011/65/EU) (EU)2015/863								

Note	1.All parameters not specially mentioned are measured at 230VAC input , full load and 25℃ of ambient temperature. 2.Ripple & Noise are measured at 20MHz of bandwidth by using a 300mm twisted pair-wire terminated with a 0.1uF & 47 uF parallel capacitor. 3.Data are typical values obtained from test samples 4.The over-temperature protection of the product is provided by the IC. 5.All Eaglerise power supply are complied with EMI regulations. Since they are belong to component and will be installed inside system enclosure. When they are integrated into a system, the EMI characteristics of the system must be re-verified again.

◆ Model list

Number	Model number	Input	Output			
		Input Current max (mA)	Current (mA)	Voltage (VDC)	Voltage No load (VDC)	Power (W)
1	*LS-8-70 SI2 E	30	70	30-40	59	2.8
2	*LS-8-80 SI2 E	40	80			3.2
3	*LS-8-100 SI2 E	50	100			4
4	*LS-8-120 SI2 E	70	120			4.8
5	*LS-8-150 SI2 E	80	150			6
6	*LS-8-160 SI2 E	90	160			6.4
7	*LS-8-180 SI2 E	100	180			7.2
8	*LS-8-200 SI2 E	110	200			8
9	*LS-8-220 SI2 E	120	220			8.8
10	LS-8-300 SI2 E	100	300	18-24	40	7.2
11	LS-8-350 SI2 E	120	350	18-24	40	8.4
12	LS-8-500 SI2 E	120	500	10-16	35	8
13	LS-8-700 SI2 E	110	700	8-11.4	28	8

◆ Inrush Current

I_{peak}	Twidth	B10	B16	B20	C10	C16	C20
8.6A	80μs	36pcs	58pcs	72pcs	36pcs	58pcs	72pcs

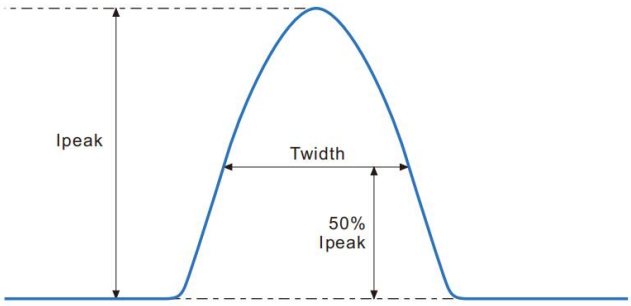

Remarks:

1.The number of drives mounted under different MCBs in the table is the maximum value. Please do not exceed this number during installation.

2.Different brands and models of miniature circuit breakers, the number of drives mounted will be slightly different.

◆ Wiring diagram

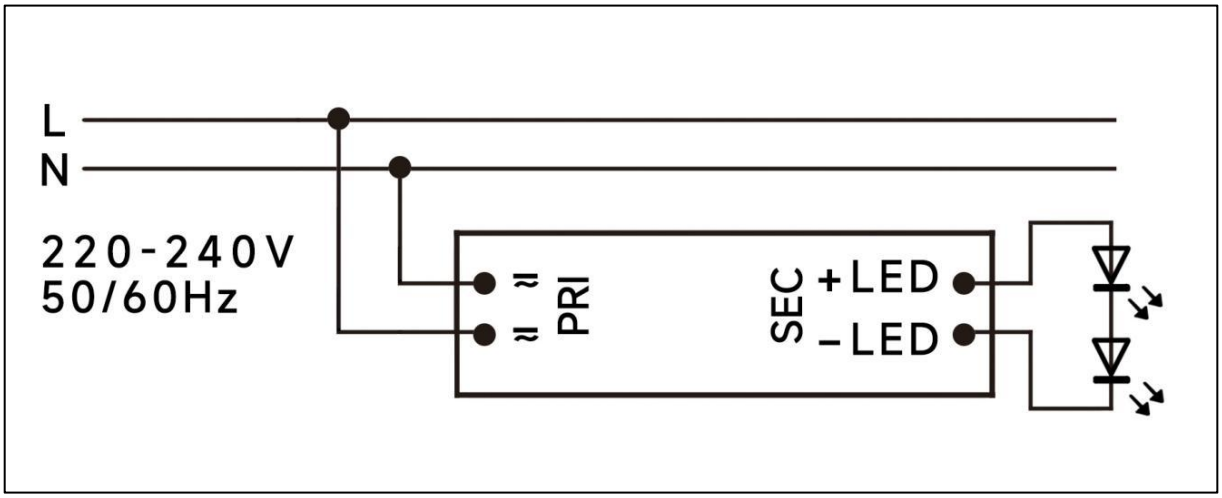

◆ 2D diagram

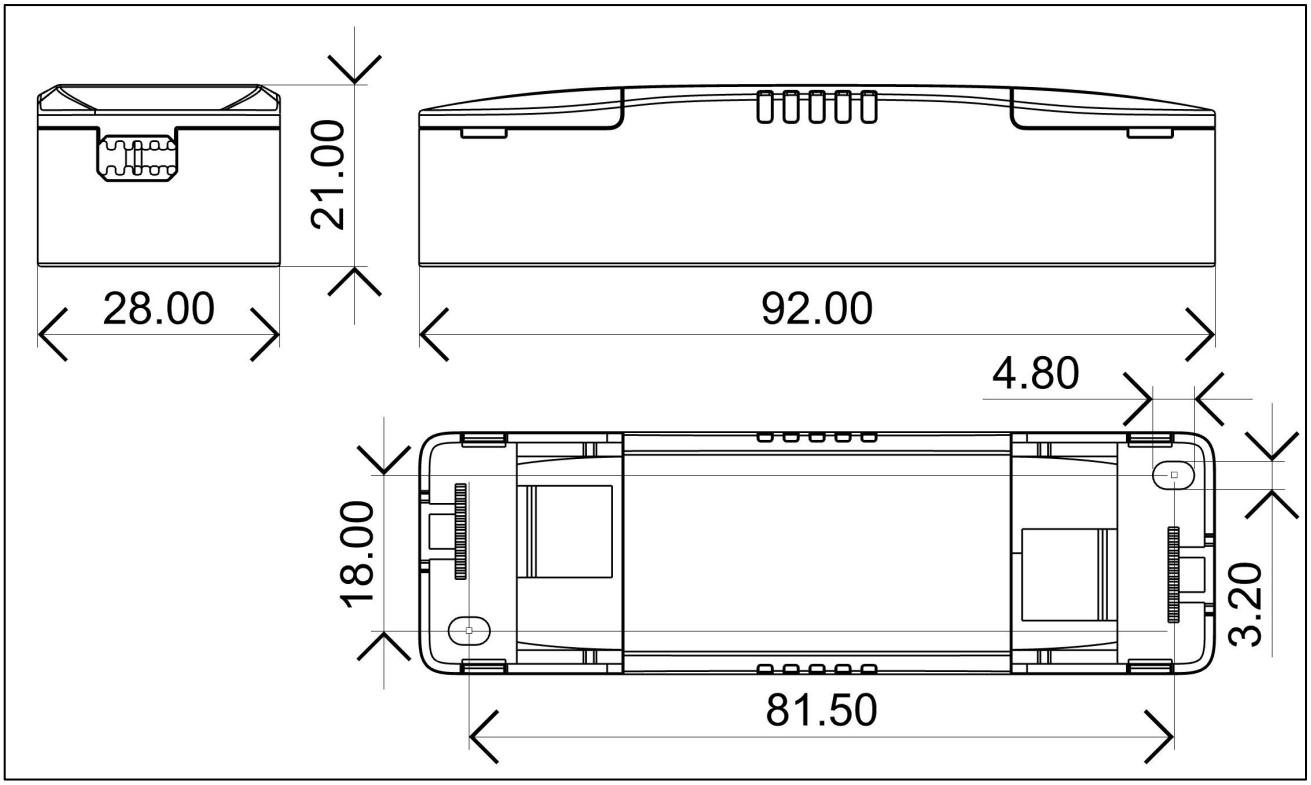

◆ Wiring & Connections

Specification item		Value （Unit ）
Input	Input wire cross-section	0.5...1.5 mm^2 （With side caps：0.75...1.5 mm^2）
	Input wire gauge.	16...20 AWG （With side caps：16...22 AWG ）
	Input wire strip length	7...9mm
Output	Output wire cross-section	0.5...1.5 mm^2
	Output wire gauge.	16...20 AWG
	Output wire strip length	7...9mm

◆ Recommended wire

Wire cross-section	Wire type
2*0.5mm^2	H03VVH2-F 2core
2*0.75mm^2	H03VVH2-F 2core
1.5mm^2	CCC 08(RV-90)
16AWG(1.25mm^2)	UL1015

Note:Solid wire is risky to use on an angled terminal.Stranded wire is recommended for this kind of use.

◆ Curve for LS-8-220 SI2 E, Io=220mA

Lifetime vs. Temperature Curve

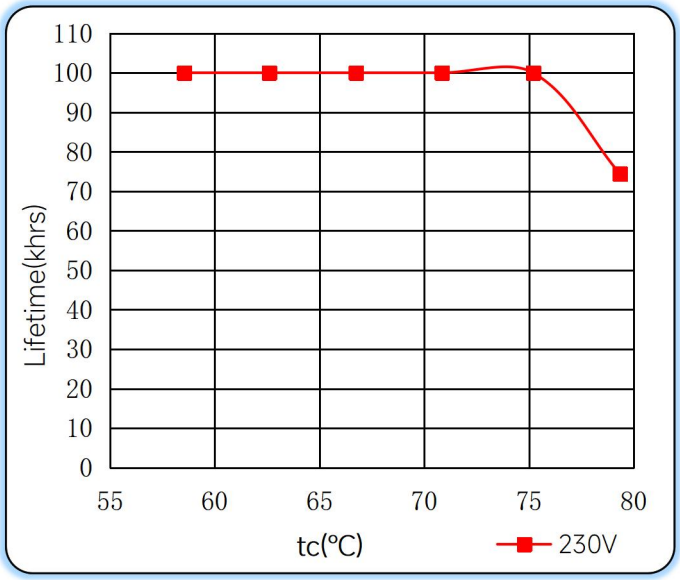

Efficiency vs. Load

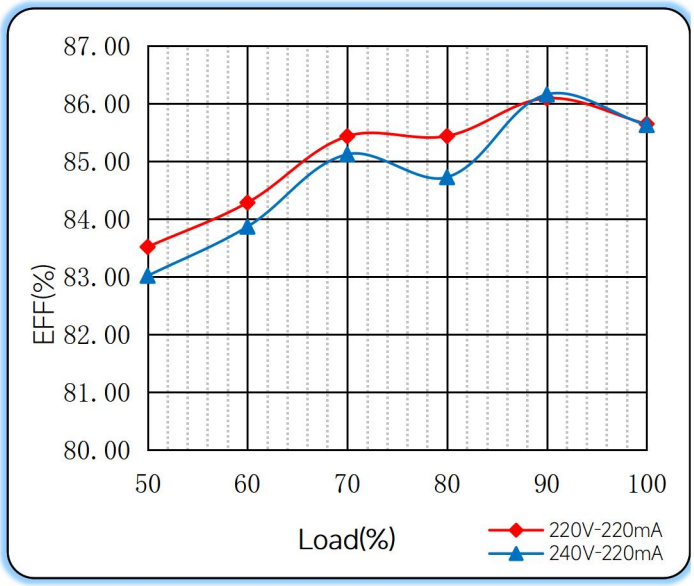

Power Factor Characteristics

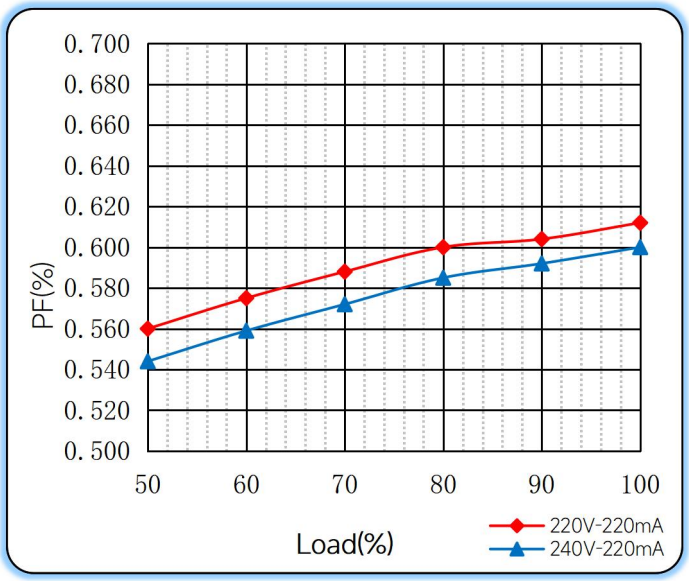

THD vs. Load

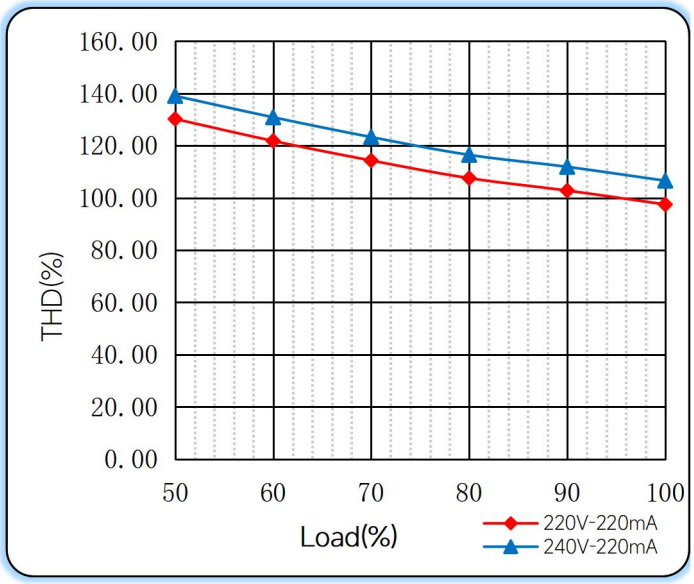

◆ Operating window

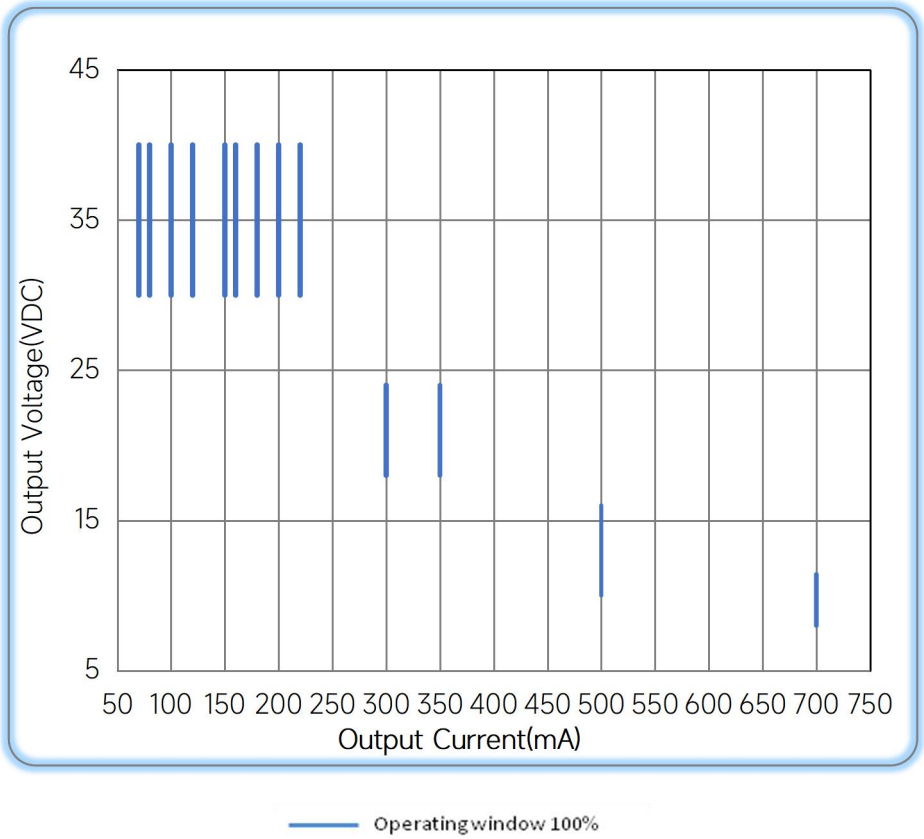

◆ Revision Updates

ITEM	BEFORE	AFTER	VERSION	DATE
Initial			A	2023/08/23
Over Load Protection	103-120%	103-130%	B	2023/09/22
Current Accuracy		update	C	2023/11/20
Efficiency		update	D	2024/03/08
Standby Power		delete	E	2025/12/26

Remark:The final interpretation of the contents of the specification belongs to Eaglerise Electric & Electronic (China) Co., Ltd.