XLamp® CXA1820 LED

PRODUCT DESCRIPTION

The XLamp® CXA1820 LED array expands Cree LED's family of high-flux, multi-die arrays, offering high performance in an easy-to-use platform. With XLamp LED lighting-class reliability, the CXA1820's uniform emitting surface enables both directional and non-directional lighting applications and luminaire designs. Available in 2-step, 3-step and 4-step color consistency, and featuring a 12-mm optical source, the CXA1820 brings new levels of flux and efficacy to this form factor.

The CX Family LED Design Guide provides basic information on the requirements to use the CXA1820 LED successfully in luminaire designs.

FEATURES

- Available in 4-step, 3-step and 2-step EasyWhite® bins at 2700 K, 3000 K, 3500 K, 4000 K & 5000 K CCT and 4-step EasyWhite bins at 5700 K & 6500 K CCT
- Available in ANSI white bins at 4000 K, 5000 K, 5700 K & 6500 K CCT
- Available in 70-, 80-, 90- and 93-minimum CRI options
- Forward voltage option: 36-V class
- 85 °C binning and characterization
- Maximum drive current: 1050 mA
- 115° viewing angle, uniform chromaticity profile
- Top-side solder connections
- Thermocouple attach point
- NEMA SSL-3 2011 standard flux bins
- RoHS and REACH compliant
- UL® recognized component (E349212)

TABLE OF CONTENTS

Characteristics 2
Operating Limits 2
Flux Characteristics, EasyWhite® Order Codes and Bins 3
Flux Characteristics, ANSI White Order Codes and Bins 6
Relative Spectral Power Distribution 7
Electrical Characteristics 7
Relative Luminous Flux 8
Typical Spatial Distribution 9
Performance Groups - Brightness 9
Performance Groups - Chromaticity 10
EasyWhite® Bins Plotted on the 1931 CIE Color Space 13
ANSI White Bins Plotted on the 1931 CIE Color Space 13
Bin and Order Code Formats 14
Mechanical Dimensions 14
Thermal Design 15
Notes 16
Packaging 17

Cree LED / 4001 E. Hwy. 54, Suite 2000 / Durham, NC 27713 USA / +1.919.313.5330 / www.cree-led.com

© 2013-2025 Cree LED. The information in this document is subject to change without notice.Cree®, the Cree logo, the Cree LED logo, XLamp® and EasyWhite® are registered trademarks of Cree LED. UL® and the UL logo are registered trademarks of UL LLC.

CHARACTERISTICS

Characteristics	Unit	Minimum	Typical	Maximum
Viewing angle (FWHM)	degrees		115	
ESD withstand voltage (HBM per Mil-Std-883D)	V			8000
DC forward current	mA			1050*
Reverse current	mA			0.1
Forward voltage (@ 550 mA, 85 °C)	V		36.2	
Forward voltage (@ 550 mA, 25 °C)	V			42

* Refer to the Operating Limits section.

OPERATING LIMITS

The maximum current rating of the CXA1820 depends on the case temperature (Tc) when the LED has reached thermal equilibrium under steady-state operation. The graph shown below assumes that the system design employs good thermal management (thermal interface material and heat sink) and may vary when poor thermal management is employed. Please refer to the Mechanical Dimensions section on page 14 for the location of the Tc measurement point.

Another important factor in good thermal management is the temperature of the Light Emitting Surface (LES). Cree LED recommends a maximum LES temperature of 135 °C to ensure optimal LED lifetime. Please refer to the Thermal Design section on page 15 for more information on LES temperature measurement.

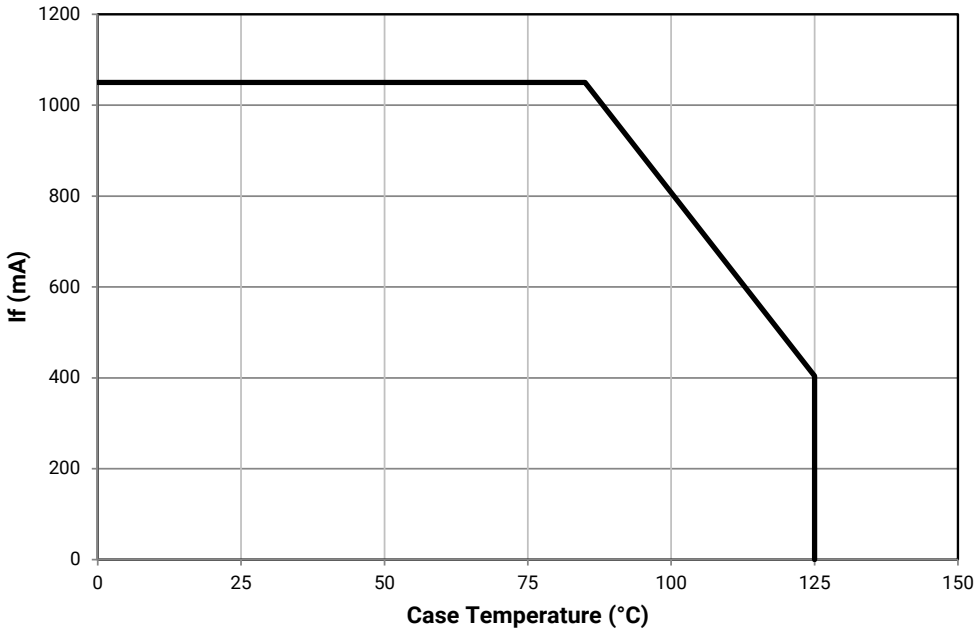

© 2013-2025 Cree LED. The information in this document is subject to change without notice.Cree®, the Cree logo, the Cree LED logo, XLamp® and EasyWhite® are registered trademarks of Cree LED. UL® and the UL logo are registered trademarks of UL LLC.

FLUX CHARACTERISTICS, EASYWHITE® ORDER CODES AND BINS (I_F = 550 mA, T_J = 85 °C)

The following table provides order codes for XLamp CXA1820 LEDs. For a complete description of the order code nomenclature, please see the Bin and Order Code Formats section (page 14).

Nominal CCT	CRI		Minimum Luminous Flux			2-Step		3-Step		4-Step	
	Min	Typ	Group	Flux (lm) @ 85 °C	Flux (lm) @ 25 °C*	Group	Order Code	Group	Order Code	Group	Order Code
6500 K	70	75	Q4	2260	2560					65F	CXA1820-0000-000N00Q465F
			R2	2420	2741						CXA1820-0000-000N00R265F
			R4	2600	2916						CXA1820-0000-000N00R465F
	80	---	Q2	2100	2379					65F	CXA1820-0000-000N0HQ265F
			Q4	2260	2560						CXA1820-0000-000N0HQ465F
			R2	2420	2741						CXA1820-0000-000N0HR265F
5700 K	70	75	Q4	2260	2560					57F	CXA1820-0000-000N00Q457F
			R2	2420	2741						CXA1820-0000-000N00R257F
			R4	2600	2916						CXA1820-0000-000N00R457F
	80	---	Q2	2100	2379					57F	CXA1820-0000-000N0HQ257F
			Q4	2260	2560						CXA1820-0000-000N0HQ457F
			R2	2420	2741						CXA1820-0000-000N0HR257F
5000 K	70	75	Q4	2260	2560	50H	CXA1820-0000-000N00Q450H			50F	CXA1820-0000-000N00Q450F
			R2	2420	2741		CXA1820-0000-000N00R250H				CXA1820-0000-000N00R250F
			R4	2600	2916		CXA1820-0000-000N00R450H				CXA1820-0000-000N00R450F
	80	---	Q2	2100	2379	50H	CXA1820-0000-000N0HQ250H	50G	CXA1820-0000-000N0HQ250G	50F	CXA1820-0000-000N0HQ250F
			Q4	2260	2560		CXA1820-0000-000N0HQ450H		CXA1820-0000-000N0HQ450G		CXA1820-0000-000N0HQ450F
			R2	2420	2741		CXA1820-0000-000N0HR250H		CXA1820-0000-000N0HR250G		CXA1820-0000-000N0HR250F
	90	95	P2	1830	2073	50H	CXA1820-0000-000N0UP250H	50G		50F	CXA1820-0000-000N0UP250F
			P4	1965	2226		CXA1820-0000-000N0UP450H		CXA1820-0000-000N0UP450G		CXA1820-0000-000N0UP450F
			Q2	2100	2379		CXA1820-0000-000N0UQ250H		CXA1820-0000-000N0UQ250G		CXA1820-0000-000N0UQ250F

Notes

- Cree LED maintains a tolerance of ±7% on flux and power measurements, ±0.005 on chromaticity (CCx, CCy) measurements and a tolerance of ±2 on CRI measurements. See the Measurements section (page 16).
- CXA1820 LED order codes specify only a minimum flux bin and not a maximum. Cree LED may ship reels in flux bins higher than the minimum specified by the order code without advance notice. Shipments will always adhere to the chromaticity bin restrictions specified by the order code.

* Flux values @ 25 °C are calculated and for reference only.

© 2013-2025 Cree LED. The information in this document is subject to change without notice.Cree®, the Cree logo, the Cree LED logo, XLamp® and EasyWhite® are registered trademarks of Cree LED. UL® and the UL logo are registered trademarks of UL LLC.

FLUX CHARACTERISTICS, EASYWHITE® ORDER CODES AND BINS (I_F = 550 mA, T_J = 85 °C) - CONTINUED

Nominal CCT	CRI		Minimum Luminous Flux			2-Step		3-Step		4-Step	
	Min	Typ	Group	Flux (lm) @ 85 °C	Flux (lm) @ 25 °C*	Group	Order Code	Group	Order Code	Group	Order Code
4000 K	70	75	Q4	2260	2560	40H	CXA1820-0000-000N00Q440H			40F	CXA1820-0000-000N00Q440F
			R2	2420	2741		CXA1820-0000-000N00R240H				CXA1820-0000-000N00R240F
			R4	2600	2916		CXA1820-0000-000N00R440H				CXA1820-0000-000N00R440F
	80	---	Q2	2100	2379	40H	CXA1820-0000-000N0HQ240H	40G	CXA1820-0000-000N0HQ240G	40F	CXA1820-0000-000N0HQ240F
			Q4	2260	2560		CXA1820-0000-000N0HQ440H		CXA1820-0000-000N0HQ440G		CXA1820-0000-000N0HQ440F
			R2	2420	2741		CXA1820-0000-000N0HR240H		CXA1820-0000-000N0HR240G		CXA1820-0000-000N0HR240F
	90	95	N4	1710	1937	40H	CXA1820-0000-000N0UN440H	40G		40F	CXA1820-0000-000N0UN440F
			P2	1830	2073		CXA1820-0000-000N0UP240H		CXA1820-0000-000N0UP240G		CXA1820-0000-000N0UP240F
			P4	1965	2226		CXA1820-0000-000N0UP440H		CXA1820-0000-000N0UP440G		CXA1820-0000-000N0UP440F
3500 K	80	---	Q2	2100	2379	35H	CXA1820-0000-000N00Q235H	35G		35F	CXA1820-0000-000N00Q235F
			Q4	2260	2560		CXA1820-0000-000N00Q435H		CXA1820-0000-000N00Q435G		CXA1820-0000-000N00Q435F
			R2	2420	2741		CXA1820-0000-000N00R235H		CXA1820-0000-000N00R235G		CXA1820-0000-000N00R235F
	93	95	N2	1590	1801	35H	CXA1820-0000-000N0YN235H	35G		35F	CXA1820-0000-000N0YN235F
			N4	1710	1937		CXA1820-0000-000N0YN435H		CXA1820-0000-000N0YN435G		CXA1820-0000-000N0YN435F
			P2	1830	2073		CXA1820-0000-000N0YP235H		CXA1820-0000-000N0YP235G		CXA1820-0000-000N0YP235F
3000 K	80	---	P4	1965	2226	30H	CXA1820-0000-000N00P430H	30G	CXA1820-0000-000N00P430G	30F	CXA1820-0000-000N00P430F
			Q2	2100	2379		CXA1820-0000-000N00Q230H		CXA1820-0000-000N00Q230G		CXA1820-0000-000N00Q230F
			Q4	2260	2535		CXA1820-0000-000N00Q430H		CXA1820-0000-000N00Q430G		CXA1820-0000-000N00Q430F
	93	95	M4	1485	1682	30H	CXA1820-0000-000N0YM430H	30G		30F	CXA1820-0000-000N0YM430F
			N2	1590	1801		CXA1820-0000-000N0YN230H		CXA1820-0000-000N0YN230G		CXA1820-0000-000N0YN230F
			N4	1710	1937		CXA1820-0000-000N0YN430H		CXA1820-0000-000N0YN430G		CXA1820-0000-000N0YN430F

Notes

- Cree LED maintains a tolerance of ±7% on flux and power measurements, ±0.005 on chromaticity (CCx, CCy) measurements and a tolerance of ±2 on CRI measurements. See the Measurements section (page 16).
- CXA1820 LED order codes specify only a minimum flux bin and not a maximum. Cree LED may ship reels in flux bins higher than the minimum specified by the order code without advance notice. Shipments will always adhere to the chromaticity bin restrictions specified by the order code.

* Flux values @ 25 °C are calculated and for reference only.

© 2013-2025 Cree LED. The information in this document is subject to change without notice.Cree®, the Cree logo, the Cree LED logo, XLamp® and EasyWhite® are registered trademarks of Cree LED. UL® and the UL logo are registered trademarks of UL LLC.

FLUX CHARACTERISTICS, EASYWHITE® ORDER CODES AND BINS (I_F = 550 mA, T_J = 85 °C) - CONTINUED

Nominal CCT	CRI		Minimum Luminous Flux			2-Step		3-Step		4-Step	
	Min	Typ	Group	Flux (lm) @ 85 °C	Flux (lm) @ 25 °C*	Group	Order Code	Group	Order Code	Group	Order Code
2700 K	80	---	P4	1965	2226	27H	CXA1820-0000-000N00P427H	27G	CXA1820-0000-000N00P427G	27F	CXA1820-0000-000N00P427F
			Q2	2100	2379		CXA1820-0000-000N00Q227H		CXA1820-0000-000N00Q227G		CXA1820-0000-000N00Q227F
			Q4	2260	2535		CXA1820-0000-000N00Q427H		CXA1820-0000-000N00Q427G		CXA1820-0000-000N00Q427F
	93	95	M2	1380	1563	27H	CXA1820-0000-000N0YM227H	27G		27F	CXA1820-0000-000N0YM227F
			M4	1485	1682		CXA1820-0000-000N0YM427H		CXA1820-0000-000N0YM427G		CXA1820-0000-000N0YM427F
			N2	1590	1801		CXA1820-0000-000N0YN227H		CXA1820-0000-000N0YN227G		CXA1820-0000-000N0YN227F

Notes

- Cree LED maintains a tolerance of ±7% on flux and power measurements, ±0.005 on chromaticity (CCx, CCy) measurements and a tolerance of ±2 on CRI measurements. See the Measurements section (page 16).
- CXA1820 LED order codes specify only a minimum flux bin and not a maximum. Cree LED may ship reels in flux bins higher than the minimum specified by the order code without advance notice. Shipments will always adhere to the chromaticity bin restrictions specified by the order code.

* Flux values @ 25 °C are calculated and for reference only.

© 2013-2025 Cree LED. The information in this document is subject to change without notice.Cree®, the Cree logo, the Cree LED logo, XLamp® and EasyWhite® are registered trademarks of Cree LED. UL® and the UL logo are registered trademarks of UL LLC.

FLUX CHARACTERISTICS, ANSI WHITE ORDER CODES AND BINS (I_F = 550 mA, T_J = 85 °C)

The following table provides order codes for XLamp CXA1820 LEDs. For a complete description of the order code nomenclature, please see the Bin and Order Code Formats section (page 14).

Nominal CCT	CRI		Minimum Luminous Flux			Chromaticity Regions	Order Code
	Min	Typ	Group	Flux (lm) @ 85 °C	Flux (lm) @ 25 °C*		
6500 K	70	75	Q4	2260	2560	1A0, 1B0, 1C0, 1D0, 65F	CXA1820-0000-000N00Q40E1
			R2	2420	2741		CXA1820-0000-000N00R20E1
			R4	2600	2916		CXA1820-0000-000N00R40E1
	80	---	Q2	2100	2379	1A0, 1B0, 1C0, 1D0, 65F	CXA1820-0000-000N0HQ20E1
			Q4	2260	2560		CXA1820-0000-000N0HQ40E1
			R2	2420	2741		CXA1820-0000-000N0HR20E1
5700 K	70	75	Q4	2260	2560	2A0, 2B0, 2C0, 2D0, 57F	CXA1820-0000-000N00Q40E2
			R2	2420	2741		CXA1820-0000-000N00R20E2
			R4	2600	2916		CXA1820-0000-000N00R40E2
	80	---	Q2	2100	2379	2A0, 2B0, 2C0, 2D0, 57F	CXA1820-0000-000N0HQ20E2
			Q4	2260	2560		CXA1820-0000-000N0HQ40E2
			R2	2420	2741		CXA1820-0000-000N0HR20E2
5000 K	70	75	Q4	2260	2560	3A0, 3B0, 3C0, 3D0, 50F	CXA1820-0000-000N00Q40E3
			R2	2420	2741		CXA1820-0000-000N00R20E3
			R4	2600	2916		CXA1820-0000-000N00R40E3
	80	---	Q2	2100	2379	3A0, 3B0, 3C0, 3D0, 50F	CXA1820-0000-000N0HQ20E3
			Q4	2260	2560		CXA1820-0000-000N0HQ40E3
			R2	2420	2741		CXA1820-0000-000N0HR20E3
4000 K	70	75	Q4	2260	2560	5A0, 5B0, 5C0, 5D0, 40F	CXA1820-0000-000N00Q40E5
			R2	2420	2741		CXA1820-0000-000N00R20E5
			R4	2600	2916		CXA1820-0000-000N00R40E5

Notes

- Cree LED maintains a tolerance of ±7% on flux and power measurements, ±0.005 on chromaticity (CCx, CCy) measurements and a tolerance of ±2 on CRI measurements. See the Measurements section (page 16).
- CXA1820 LED order codes specify only a minimum flux bin and not a maximum. Cree LED may ship reels in flux bins higher than the minimum specified by the order code without advance notice. Shipments will always adhere to the chromaticity bin restrictions specified by the order code.

* Flux values @ 25 °C are calculated and for reference only.

© 2013-2025 Cree LED. The information in this document is subject to change without notice.Cree®, the Cree logo, the Cree LED logo, XLamp® and EasyWhite® are registered trademarks of Cree LED. UL® and the UL logo are registered trademarks of UL LLC.

RELATIVE SPECTRAL POWER DISTRIBUTION

The following graph is the result of a series of pulsed measurements at 550 mA and TJ = 85 °C.

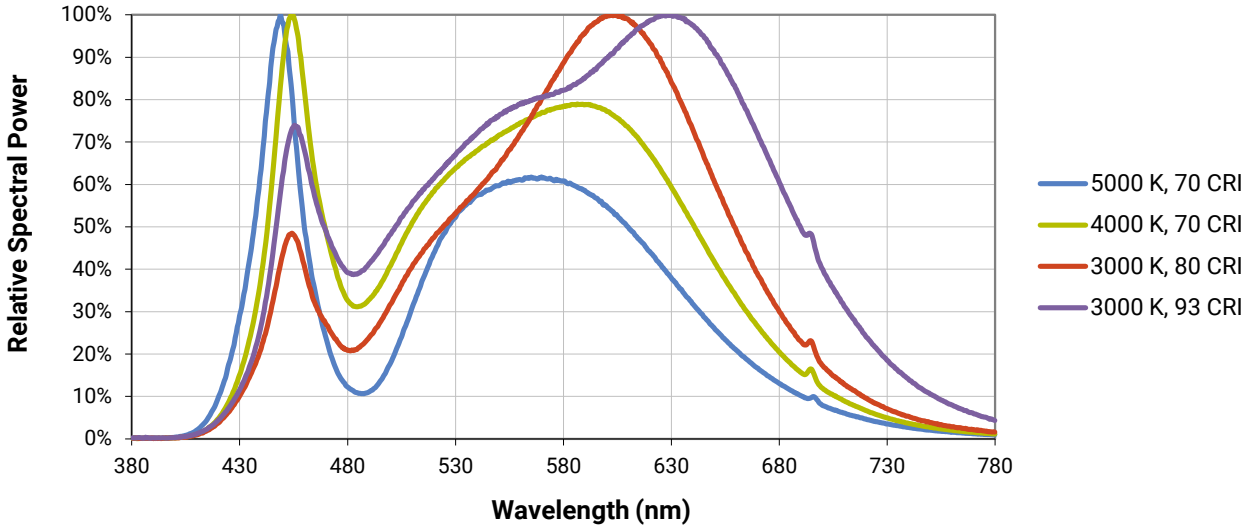

ELECTRICAL CHARACTERISTICS

The following graph is the result of a series of steady-state measurements.

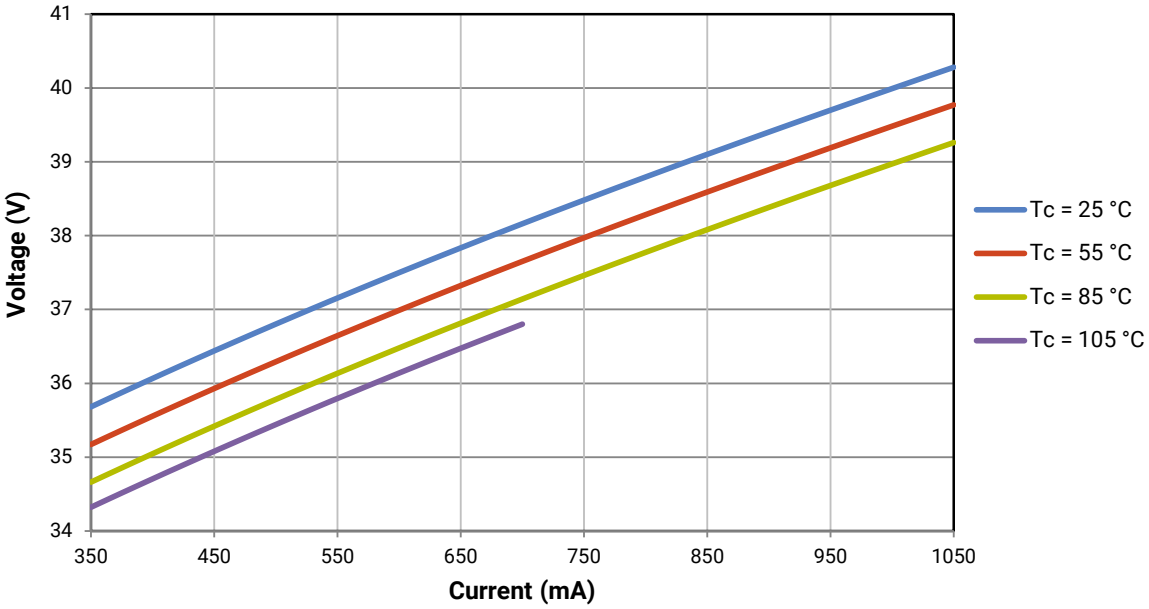

© 2013-2025 Cree LED. The information in this document is subject to change without notice.Cree®, the Cree logo, the Cree LED logo, XLamp® and EasyWhite® are registered trademarks of Cree LED. UL® and the UL logo are registered trademarks of UL LLC.

RELATIVE LUMINOUS FLUX

The relative luminous flux values provided below are the ratio of:

- Measurements of CXA1820 at steady-state operation at the given conditions, divided by
- Flux measured during binning, which is a pulsed measurement at 550 mA at T_J = 85 °C.

For example, at steady-state operation of Tc = 55 °C, I_F = 850 mA, the relative luminous flux ratio is 140% in the chart below. A CXA1820 LED that measures 2100 lm during binning will deliver 2940 lm (2100 * 1.4) at steady-state operation of Tc = 55 °C, I_F = 850 mA.

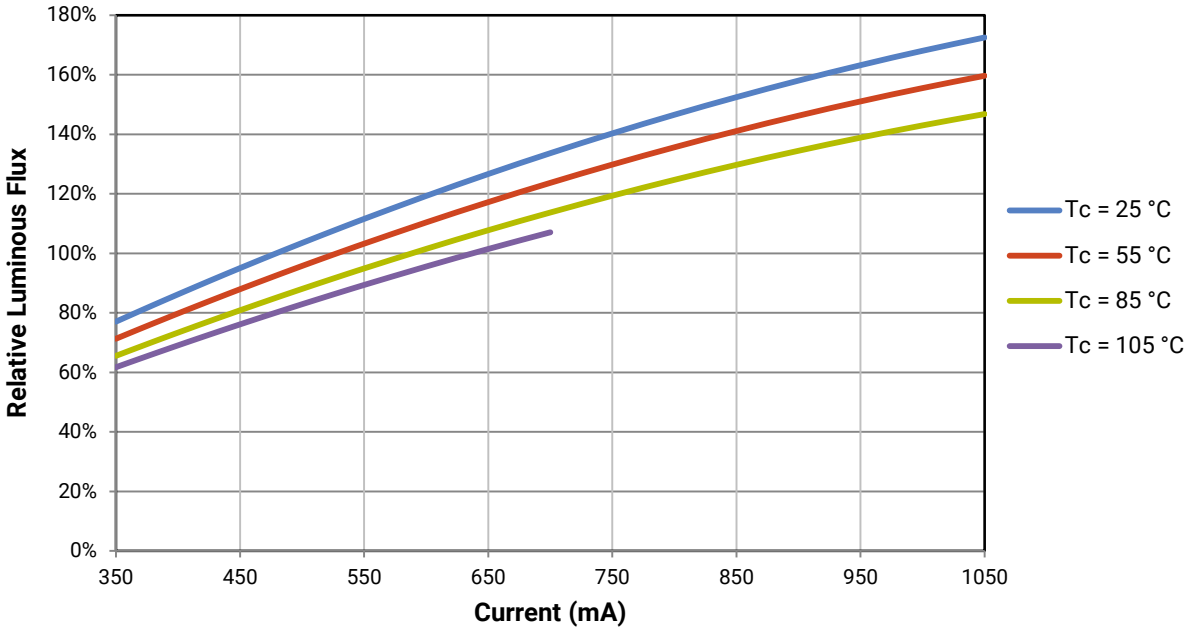

© 2013-2025 Cree LED. The information in this document is subject to change without notice.Cree®, the Cree logo, the Cree LED logo, XLamp® and EasyWhite® are registered trademarks of Cree LED. UL® and the UL logo are registered trademarks of UL LLC.

TYPICAL SPATIAL DISTRIBUTION

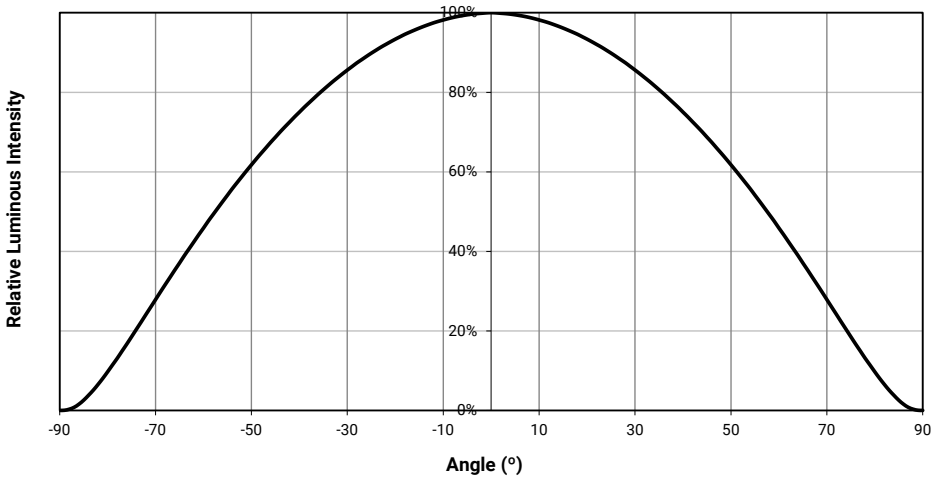

PERFORMANCE GROUPS - BRIGHTNESS (I_F = 550 mA, T_J = 85 °C)

XLamp CXA1820 LEDs are tested for luminous flux and placed into one of the following bins.

Group Code	Minimum Luminous Flux	Maximum Luminous Flux
M2	1380	1485
M4	1485	1590
N2	1590	1710
N4	1710	1830
P2	1830	1965
P4	1965	2100
Q2	2100	2260
Q4	2260	2420
R2	2420	2600
R4	2600	2780
S2	2780	2990

© 2013-2025 Cree LED. The information in this document is subject to change without notice.Cree®, the Cree logo, the Cree LED logo, XLamp® and EasyWhite® are registered trademarks of Cree LED. UL® and the UL logo are registered trademarks of UL LLC.

PERFORMANCE GROUPS - CHROMATICITY (T_J = 85 °C)

XLamp CXA1820 LEDs are tested for chromaticity and placed into one of the regions defined by the following bounding coordinates.

EasyWhite Color Temperatures – 2-Step			
Code	CCT	x	y
50H	5000 K	0.3429	0.3507
		0.3434	0.3571
		0.3475	0.3604
		0.3469	0.3539
40H	4000 K	0.3784	0.3741
		0.3804	0.3818
		0.3867	0.3857
		0.3844	0.3778
35H	3500 K	0.4030	0.3857
		0.4061	0.3941
		0.4132	0.3976
		0.4099	0.3890
30H	3000 K	0.4291	0.3973
		0.4333	0.4062
		0.4395	0.4084
		0.4351	0.3994
27H	2700 K	0.4528	0.4046
		0.4578	0.4138
		0.4638	0.4152
		0.4586	0.4060

EasyWhite Color Temperatures – 3-Step Ellipse						
Bin Code	CCT	Center Point		Major Axis	Minor Axis	Rotation Angle (°)
		x	y	a	b	
50G	5000 K	0.3447	0.3553	0.00840	0.00312	65.0
40G	4000 K	0.3818	0.3797	0.00939	0.00402	53.7
35G	3500 K	0.4073	0.3917	0.00927	0.00414	54.0
30G	3000 K	0.4338	0.4030	0.00834	0.00408	53.2
27G	2700 K	0.4577	0.4099	0.00834	0.00420	48.5

© 2013-2025 Cree LED. The information in this document is subject to change without notice.Cree®, the Cree logo, the Cree LED logo, XLamp® and EasyWhite® are registered trademarks of Cree LED. UL® and the UL logo are registered trademarks of UL LLC.

PERFORMANCE GROUPS - CHROMATICITY (T_J = 85 °C) - CONTINUED

EasyWhite Color Temperatures – 4-Step			
Code	CCT	x	y
65F	6500 K	0.3097	0.3196
		0.3079	0.3297
		0.3164	0.3382
		0.3176	0.3275
57F	5700 K	0.3253	0.3325
		0.3249	0.3439
		0.3331	0.3514
		0.3330	0.3393
50F	5000 K	0.3407	0.3459
		0.3415	0.3586
		0.3499	0.3654
		0.3484	0.3521
40F	4000 K	0.3744	0.3685
		0.3782	0.3837
		0.3912	0.3917
		0.3863	0.3758
35F	3500 K	0.3981	0.3800
		0.4040	0.3966
		0.4186	0.4037
		0.4116	0.3865
30F	3000 K	0.4242	0.3919
		0.4322	0.4096
		0.4449	0.4141
		0.4359	0.3960
27F	2700 K	0.4475	0.3994
		0.4573	0.4178
		0.4695	0.4207
		0.4589	0.4021

© 2013-2025 Cree LED. The information in this document is subject to change without notice.Cree®, the Cree logo, the Cree LED logo, XLamp® and EasyWhite® are registered trademarks of Cree LED. UL® and the UL logo are registered trademarks of UL LLC.

PERFORMANCE GROUPS - CHROMATICITY (T_J = 85 °C) - CONTINUED

ANSI White Bins				
Code	CCT	Bin Code	x	y
0E1	6500 K	1A0	0.3048	0.3207
			0.3130	0.3290
			0.3144	0.3186
			0.3068	0.3113
		1B0	0.3028	0.3304
			0.3115	0.3391
			0.3130	0.3290
			0.3048	0.3207
		1C0	0.3115	0.3391
			0.3205	0.3481
			0.3213	0.3373
			0.3130	0.3290
		1D0	0.3130	0.3290
			0.3213	0.3373
			0.3221	0.3261
			0.3144	0.3186

ANSI White Bins				
Code	CCT	Bin Code	x	y
0E2	5700 K	2A0	0.3215	0.3350
			0.3290	0.3417
			0.3290	0.3300
			0.3222	0.3243
		2B0	0.3207	0.3462
			0.3290	0.3538
			0.3290	0.3417
			0.3215	0.3350
		2C0	0.3290	0.3538
			0.3376	0.3616
			0.3371	0.3490
			0.3290	0.3417
		2D0	0.3290	0.3417
			0.3371	0.3490
			0.3366	0.3369
			0.3290	0.3300

ANSI White Bins				
Code	CCT	Bin Code	x	y
0E3	5000 K	3A0	.3371	.3490
			.3451	.3554
			.3440	.3427
			.3366	.3369
		3B0	.3376	.3616
			.3463	.3687
			.3451	.3554
			.3371	.3490
		3C0	.3463	.3687
			.3551	.3760
			.3533	.3620
			.3451	.3554
		3D0	.3451	.3554
			.3533	.3620
			.3515	.3487
			.3440	.3427

ANSI White Bins				
Code	CCT	Bin Code	x	y
0E5	4000 K	5A0	.3670	.3578
			.3702	.3722
			.3825	.3798
			.3783	.3646
		5B0	.3702	.3722
			.3736	.3874
			.3869	.3958
			.3825	.3798
		5C0	.3825	.3798
			.3869	.3958
			.4006	.4044
			.3950	.3875
		5D0	.3783	.3646
			.3825	.3798
			.3950	.3875
			.3898	.3716

© 2013-2025 Cree LED. The information in this document is subject to change without notice.Cree®, the Cree logo, the Cree LED logo, XLamp® and EasyWhite® are registered trademarks of Cree LED. UL® and the UL logo are registered trademarks of UL LLC.

EASYWHITE® BINS PLOTTED ON THE 1931 CIE COLOR SPACE (T_J = 85 °C)

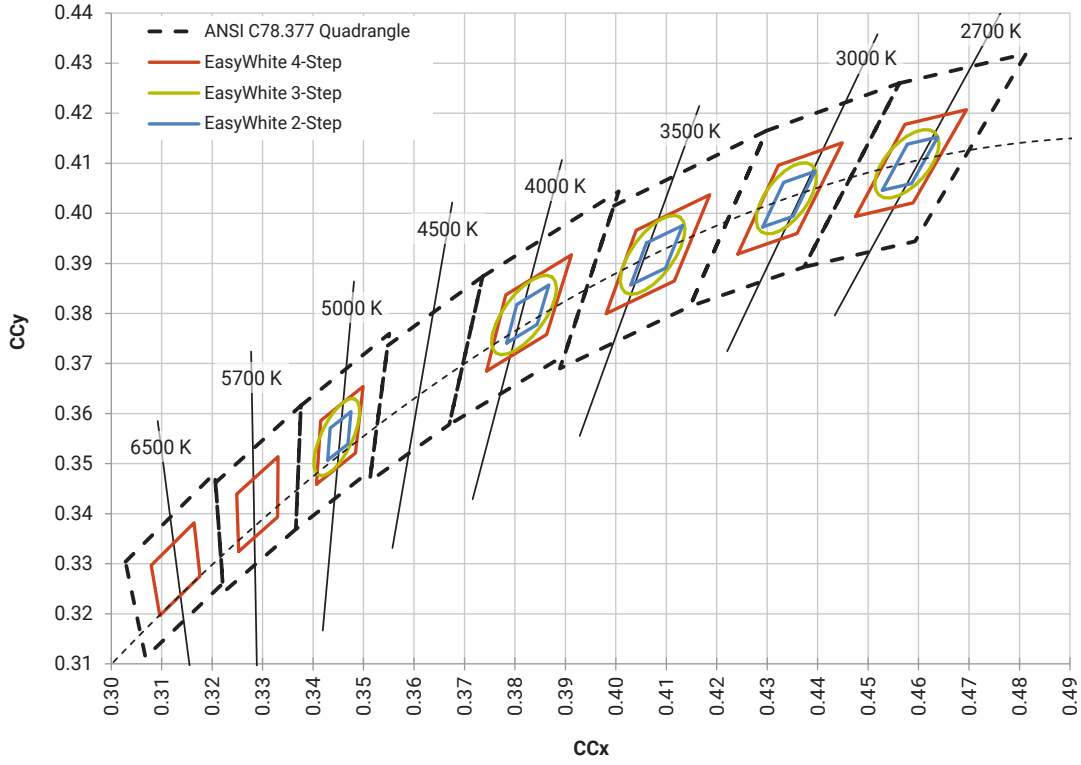

ANSI WHITE BINS PLOTTED ON THE 1931 CIE COLOR SPACE (T_J = 85 °C)

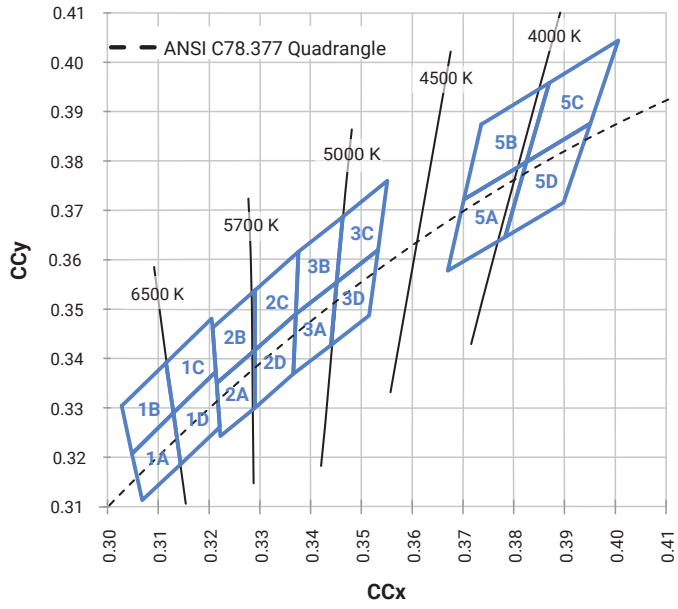

© 2013-2025 Cree LED. The information in this document is subject to change without notice.Cree®, the Cree logo, the Cree LED logo, XLamp® and EasyWhite® are registered trademarks of Cree LED. UL® and the UL logo are registered trademarks of UL LLC.

BIN AND ORDER CODE FORMATS

Bin codes and order codes are configured as follows:

Order Code

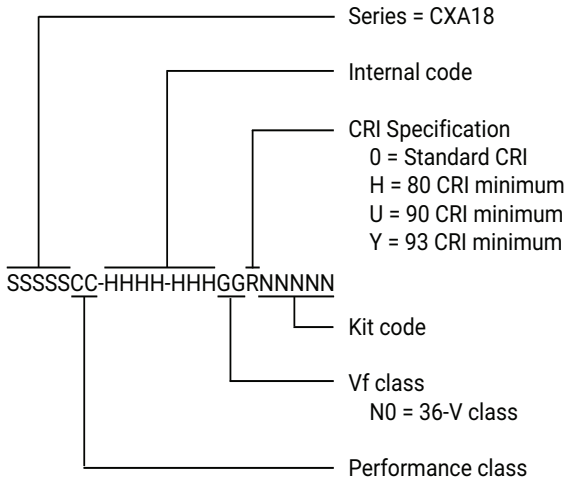

Bin Code

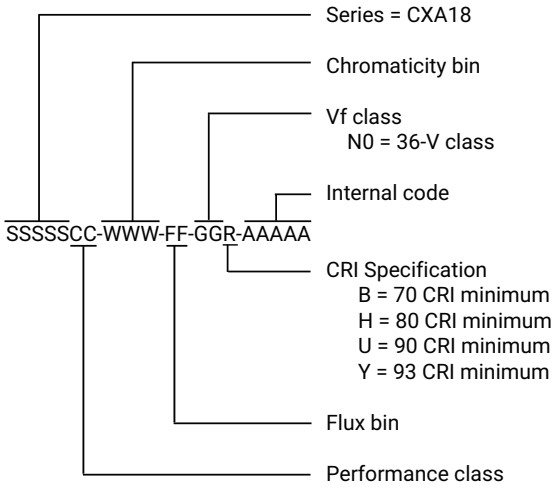

MECHANICAL DIMENSIONS

Dimensions are in mm.

Tolerances unless otherwise specified: ±.13

x° ±1°

Meaning of 1820N

1820N = 36-V CXA1820

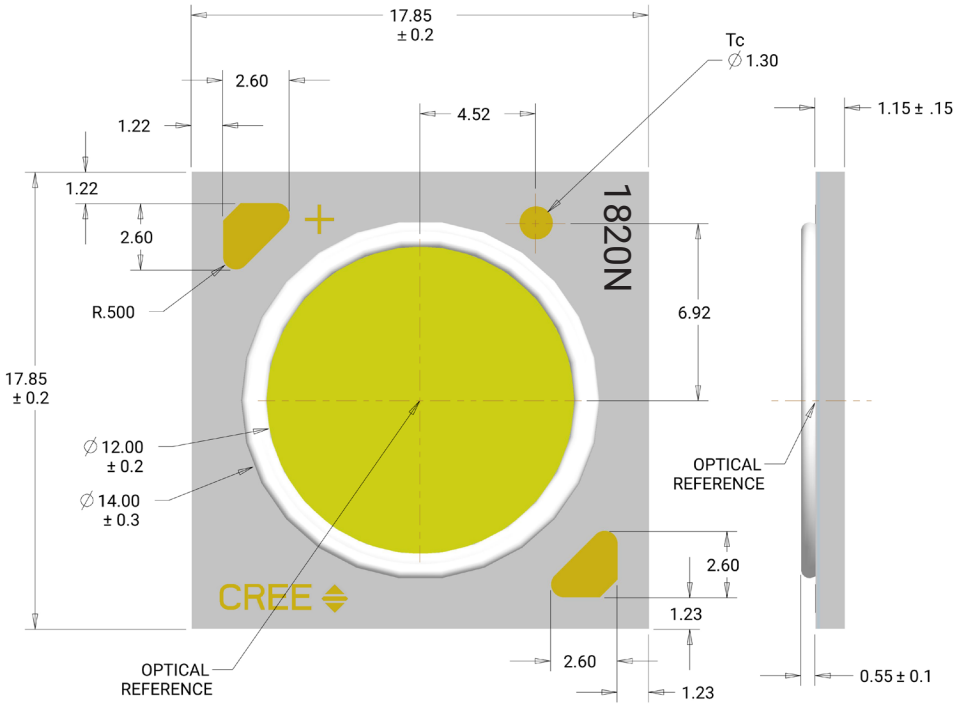

© 2013-2025 Cree LED. The information in this document is subject to change without notice.Cree®, the Cree logo, the Cree LED logo, XLamp® and EasyWhite® are registered trademarks of Cree LED. UL® and the UL logo are registered trademarks of UL LLC.

THERMAL DESIGN

The CXA family of LED arrays can include over a hundred different LED die inside one package, and thus over a hundred different junction temperatures (T_J). Cree LED has intentionally removed junction-temperature-based operating limits and replaced the commonplace maximum T_J calculations with maximum ratings based on forward current (I_F) and case temperature (Tc). No additional calculations are required to ensure that the CXA LED is being operated within its designed limits. LES temperature measurement provides additional verification of good thermal design. Please refer to page 2 for the Operating Limit specifications.

There is no need to calculate for T_J inside the package, as the thermal management design process, specifically from T_{SP} to ambient (T_a), remains identical to any other LED component. For more information on thermal management of XLamp LEDs, please refer to the Thermal Management application note. For CXA soldering recommendations and more information on thermal interface materials (TIM), LES temperature measurement, and connection methods, please refer to the XLamp CX Family LEDs soldering and handling document. The CX Family LED Design Guide provides basic information on the requirements to use XLamp CXA LEDs successfully in luminaire designs.

To keep the CXA1820 LED at or below the maximum rated Tc, the case to ambient temperature thermal resistance (R_c-a) must be at or below the maximum R_c-a value shown on the following graph, depending on the operating environment. The y-axis in the graph is a base 10 logarithmic scale.

As the figure at right shows, the R_c-a value is the sum of the thermal resistance of the TIM (R_tim) plus the thermal resistance of the heat sink (R_hs).

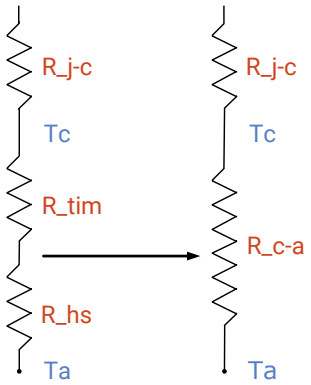

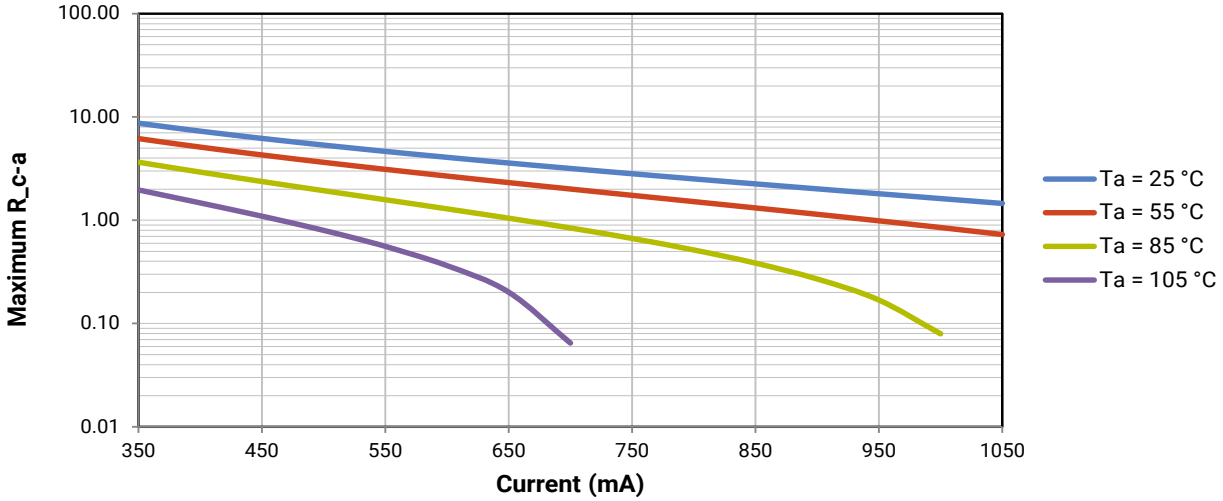

© 2013-2025 Cree LED. The information in this document is subject to change without notice.Cree®, the Cree logo, the Cree LED logo, XLamp® and EasyWhite® are registered trademarks of Cree LED. UL® and the UL logo are registered trademarks of UL LLC.

NOTES

Measurements

The luminous flux, radiant power, chromaticity, forward voltage and CRI measurements in this document are binning specifications only and solely represent product measurements as of the date of shipment. These measurements will change over time based on a number of factors that are not within Cree LED's control and are not intended or provided as operational specifications for the products. Calculated values are provided for informational purposes only and are not intended or provided as specifications.

Pre-Release Qualification Testing

Please read the LED Reliability Overview for details of the qualification process Cree LED applies to ensure long-term reliability for XLamp LEDs and details of Cree LED's pre-release qualification testing for XLamp LEDs.

Lumen Maintenance

Cree LED now uses standardized IES LM-80-08 and TM-21-11 methods for collecting long-term data and extrapolating LED lumen maintenance. For information on the specific LM-80 data sets available for this LED, refer to the public LM-80 results document.

Please read the Long-Term Lumen Maintenance application note for more details on Cree LED's lumen maintenance testing and forecasting. Please read the Thermal Management application note for details on how thermal design, ambient temperature, and drive current affect the LED junction temperature.

RoHS Compliance

The levels of RoHS restricted materials in this product are below the maximum concentration values (also referred to as the threshold limits) permitted for such substances, or are used in an exempted application, in accordance with EU Directive 2011/65/EC (RoHS2), as implemented January 2, 2013. RoHS Declarations for this product can be obtained from your Cree LED representative or from the Product Ecology section of the Cree LED website.

REACH Compliance

REACH substances of very high concern (SVHCs) information is available for this product. Since the European Chemical Agency (ECHA) has published notice of their intent to frequently revise the SVHC listing for the foreseeable future, please contact a Cree LED representative to insure you get the most up-to-date REACH Declaration. REACH banned substance information (REACH Article 67) is also available upon request.

UL® Recognized Component

This product meets the requirements to be considered a UL Recognized Component with Level 4 enclosure consideration. The LED package or a portion thereof has been investigated as a fire and electrical enclosure per ANSI/UL 8750.

Vision Advisory

WARNING: Do not look at an exposed lamp in operation. Eye injury can result. For more information about LEDs and eye safety, please refer to the LED Eye Safety application note.

© 2013-2025 Cree LED. The information in this document is subject to change without notice.Cree®, the Cree logo, the Cree LED logo, XLamp® and EasyWhite® are registered trademarks of Cree LED. UL® and the UL logo are registered trademarks of UL LLC.

PACKAGING

CXA1820 LEDs are packaged in trays of 20. Five trays are sealed in an anti-static bag and placed inside a carton, for a total of 100 LEDs per carton. Each carton contains 100 LEDs from the same performance bin.

Dimensions are in inches.
Tolerances: ±.13
x° ± 1°

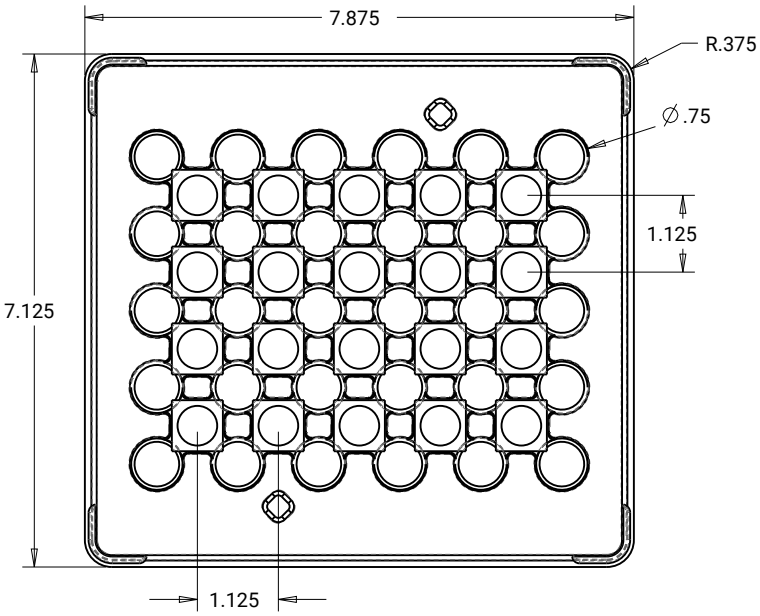

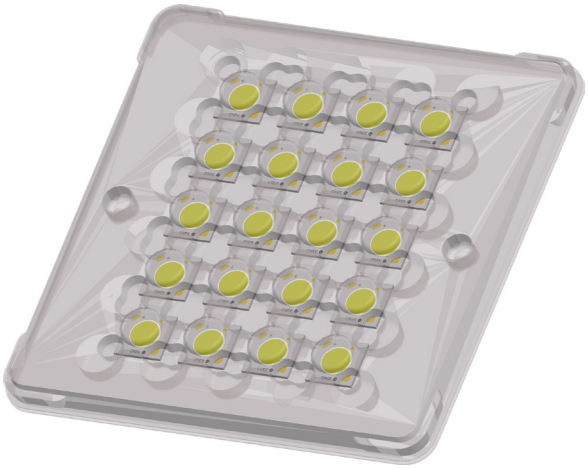

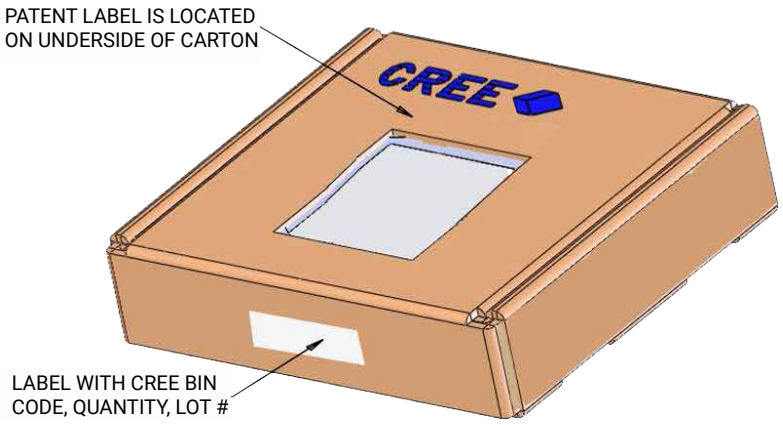

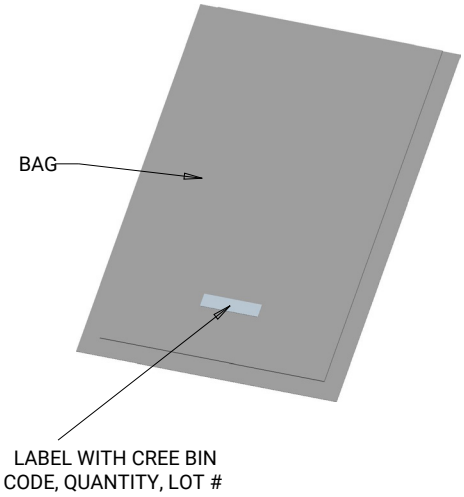

© 2013-2025 Cree LED. The information in this document is subject to change without notice.Cree®, the Cree logo, the Cree LED logo, XLamp® and EasyWhite® are registered trademarks of Cree LED. UL® and the UL logo are registered trademarks of UL LLC.