14W Constant Current Power Supply

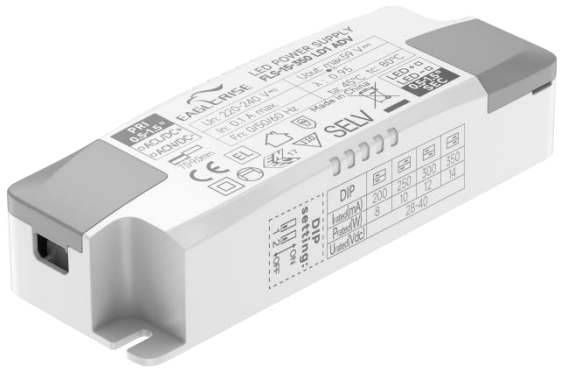

■Approve

Features

- For luminaries of protection Class II，SELV，Independent
- Input Voltage： 220-240VAC
- Protections：SCP/OLP/OVP/OTP
- Power Factor：0.95(Typ.)
- Efficiency：≥92%(Typ.)
- Adjustable Output Current with dip-switch
- 5 years warranty
- IP20

Applications

- LED panel、LED down light

◆ Description

FLS-15-350 LD1 ADV is a 14W constant current LED driver with 200 to 350mA output current and a forward voltage range from 28 to 40Vdc. The output current is adjustable by DIP Switch. With it's compact dimensions from 116 x 41x 26 mm. It is easy to integrate in LED Panel and down light products. The side covers are available as accessories and allow to use the LED driver independent.

◆ Model code

FLS-15-350 LD1 ADV

Flicker-free

Current

Power

Series

◆ Specification

Output	Constant Current (mA)	200mA	250mA	300mA	350mA
	Voltage Range(VDC)	28-40V			
	Unload voltage Max.(VDC)	59V			
	Current Accuracy	±8%		±5%	
	Output LF current ripple(≤120Hz)	≤±3%			
	SVM	≤0.4			
	Pst	≤1			
	Efficiency(Typ.)	≥92% @Full Load,230V			
Input	Rated input voltage(VAC)	220-240V			
	Range of input voltage(VAC)	198-264VAC			
	Maximum voltage	300VAC@1 h maximum,unit might not operate in this abnormal condition			
	Range of input voltage(VDC)	176-280VDC			
	Frequency(Hz)	0/50/60 Hz			
	Displacement factor	0.95 @Full Load,230V			
	Power Factor	0.95 @Full Load,230V			
	Input Current max	0.1AMax			
	Start-up time	＜0.5S			
	No Load Power	≤0.5W			
	THD (Typ.)	<10% @Full Load,230V			
Protection	Over Load Protection	103-120%			
		YES/Auto Resume			
	Over Voltage Protection	>59V			
		YES/Auto Resume			
	Short circuit Protection	YES/Auto Resume			
	Over Temperature Protection	YES/Auto Resume			
capability	Surge capability (L-N)	1KV			
	Surge capability (L/N-Ground)	NA			
Environment	Operating Temperature	-20℃~+45℃			
	Humidity	20%-90%RH			
	Tc	80℃			
	Storage Temperature	-25℃~+60℃			
	Life time	＞50000h@Tc=75℃			
	Ripple&Noise	≤20dB(A)@10cm			
Surface	Dimension	116X41X26mm			
	material	PC			
Standards	Safety	GB19510. 1, GB19510. 14;IEC61347- 1, IEC61347-2- 13;EN61347- 1, EN61347-2-13; EN62384;			

	EMC	GB/T17743, GB17625. 1;EN55015, EN61000-3-2, EN61000-3-3, EN61547;EN61000-4-2,3,4,5,6,8,11, EN61547;EN61000-4-5
	Energy Efficiency	Erp2.0 EU 2019/2020
	RoHS	RoHS (2011/65/EU) (EU)2015/863
Note	1.All parameters not specially mentioned are measured at 230VAC input , full load and 25℃ of ambient temperature. 2.Ripple & Noise are measured at 20MHz of bandwidth by using a 300mm twisted pair-wire terminated with a 0.1uF & 47 uF parallel capacitor.	

◆ Parameter

Number	Output				Switch position	
	Current (mA)	Voltage (VDC)	Voltage No load (VDC)	Power (W)	1	2
1	200mA	28-40VDC	59	8	--	--
2	250mA			10	ON	--
3	300mA			12	--	ON
*4	350mA	28-40VDC		14	ON	ON

* Factory default

◆ Inrush Current

I^{peak}	Twidth	B10	B16	B20	C10	C16	C20
19.4A	**112μs**	39pcs	62pcs	78pcs	65pcs	104pcs	130pcs

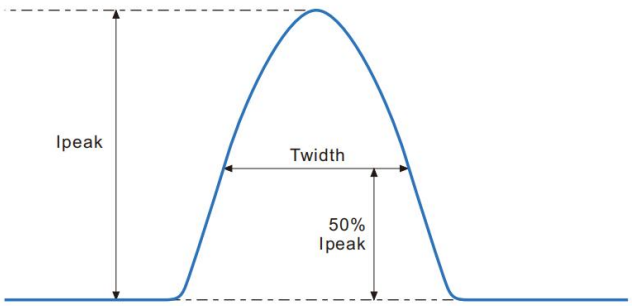

Remarks:

1.The number of drives mounted under different MCBs in the table is the maximum value. Please do not exceed this number during installation.

2.Different brands and models of miniature circuit breakers, the number of drives mounted will be slightly different.

◆ Wiring diagram

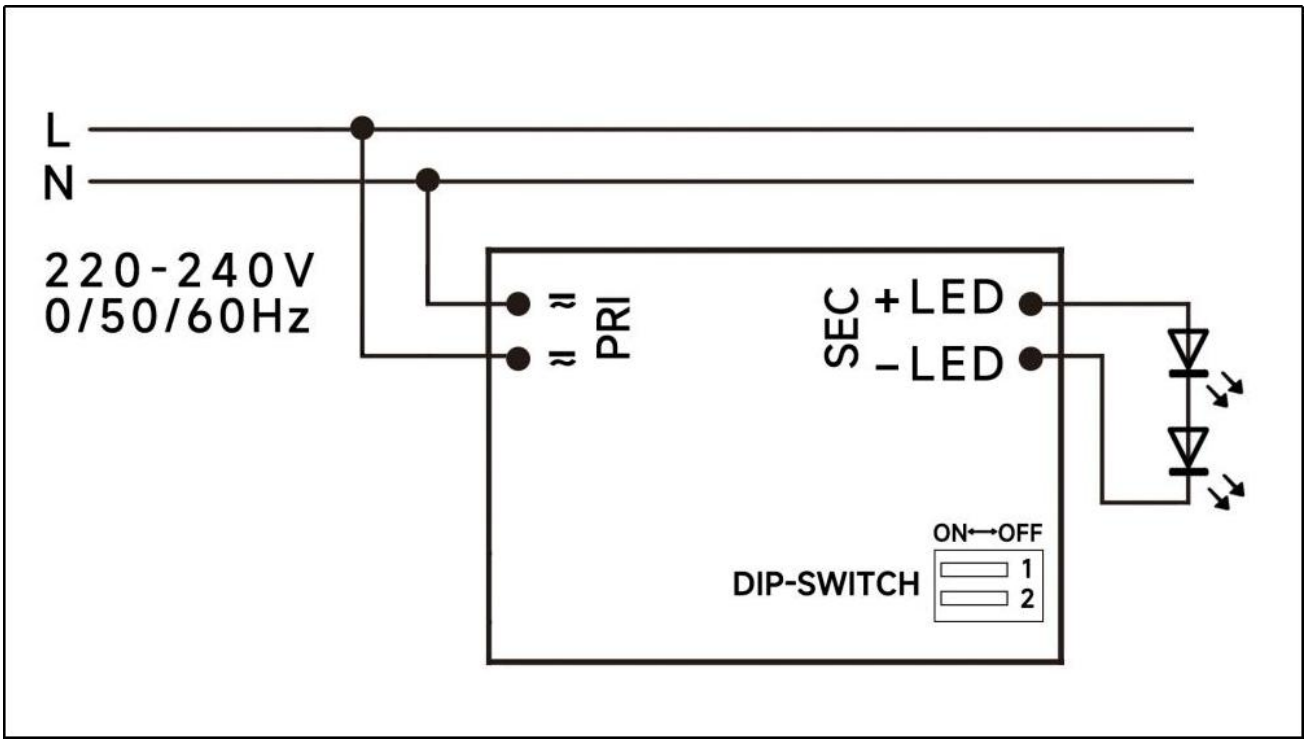

◆ 2D diagram

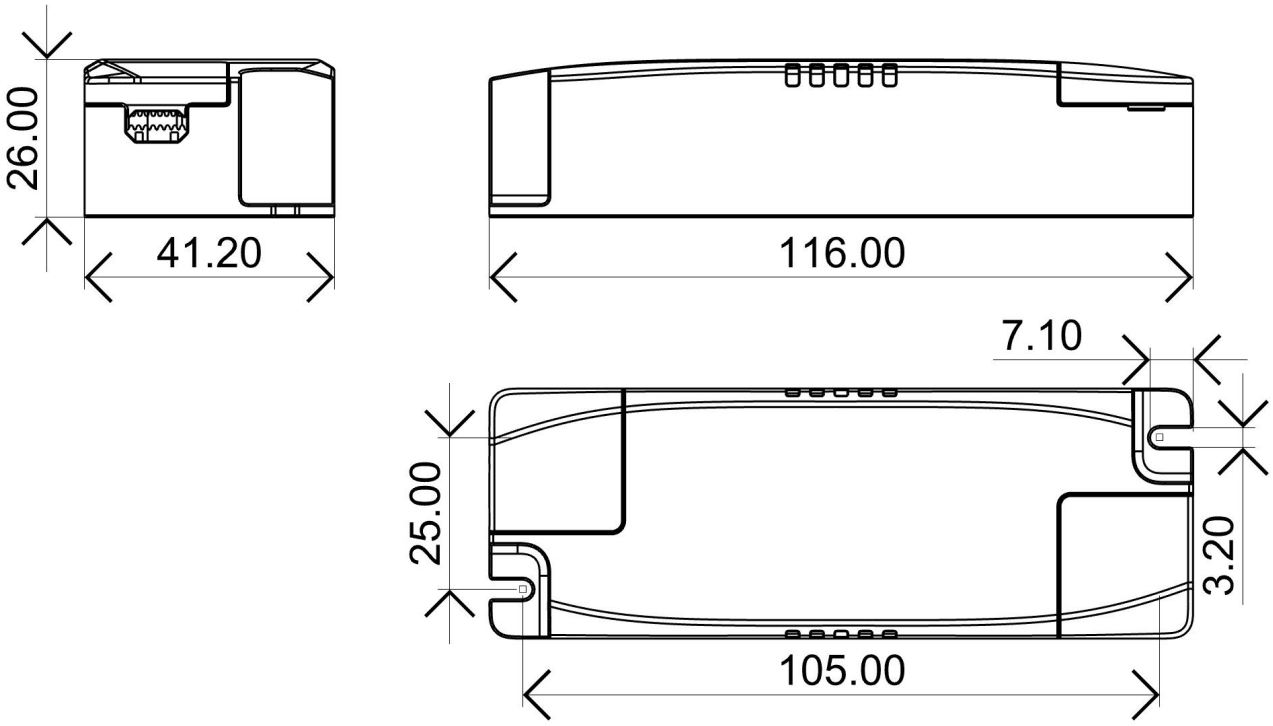

◆ Wiring & Connections

Specification item		Value （Unit ）
Input	Input wire cross-section	0.5...1.5 mm^2
	Input wire gauge.	16...20 AWG
	Input wire strip length	7...9mm
Output	Output wire cross-section	0.5...1.5 mm^2
	Output wire gauge.	16...20 AWG
	Output wire strip length	7...9mm

Note:Solid wire is risky to use on an angled terminal.Stranded wire is recommended for this kind of use.

◆ Packaging

Model	Product Dimensions(mm)	weight/piece	Outer carton dimension(mm)	Quantity/carton	Net weight/carton(Kg)	Gross weight/carton(Kg)
FLS-15-350 LD1 ADV	116X41X26mm	0.0757	370X275X215mm	126	9.538	10.19

◆ Curve for FLS-15-350 LD1 ADV, Io=350mA

Lifetime vs. Temperature Curve

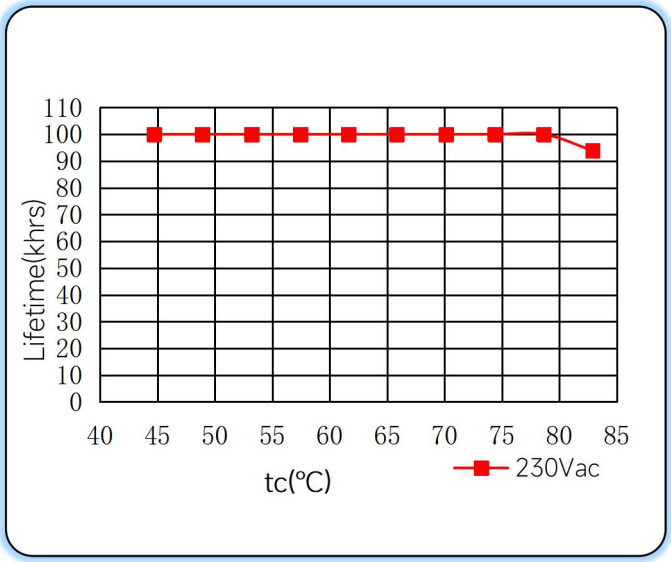

Efficiency vs. Load

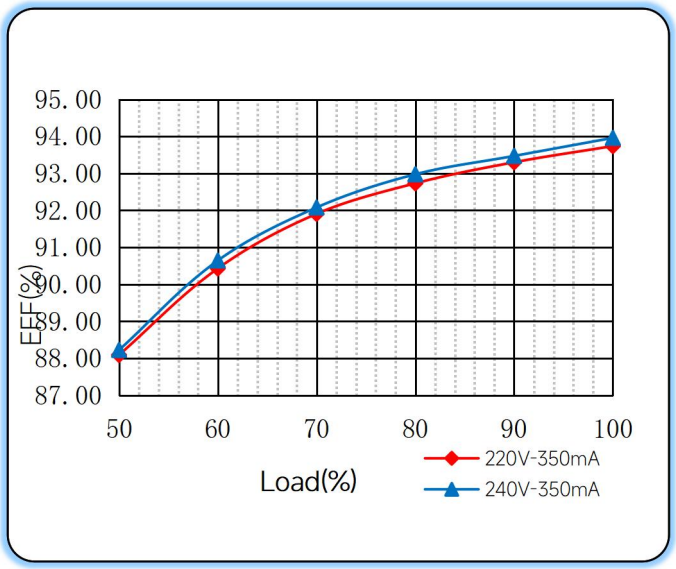

Power Factor Characteristics

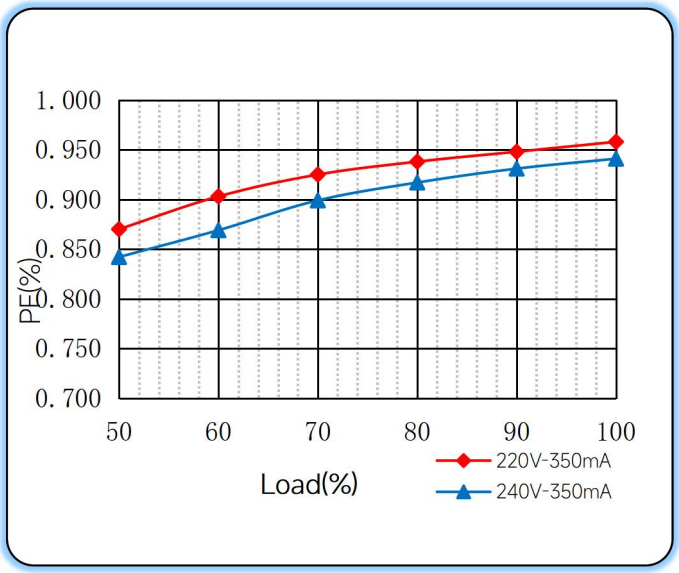

THD vs. Load

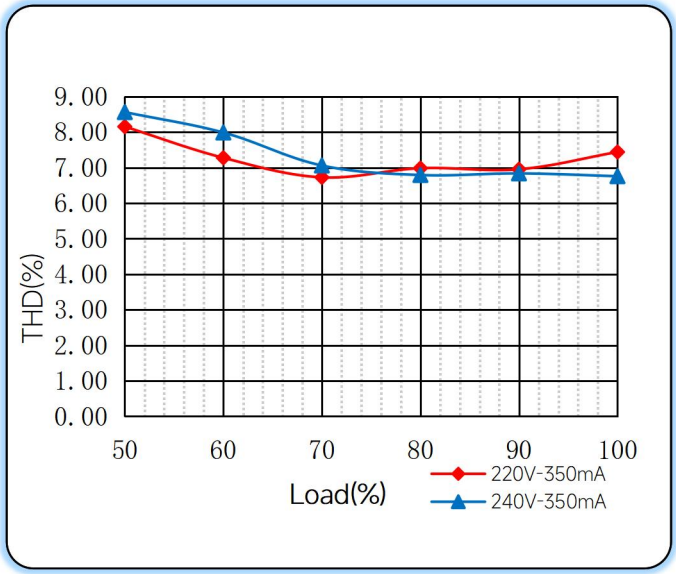

◆ Operating window

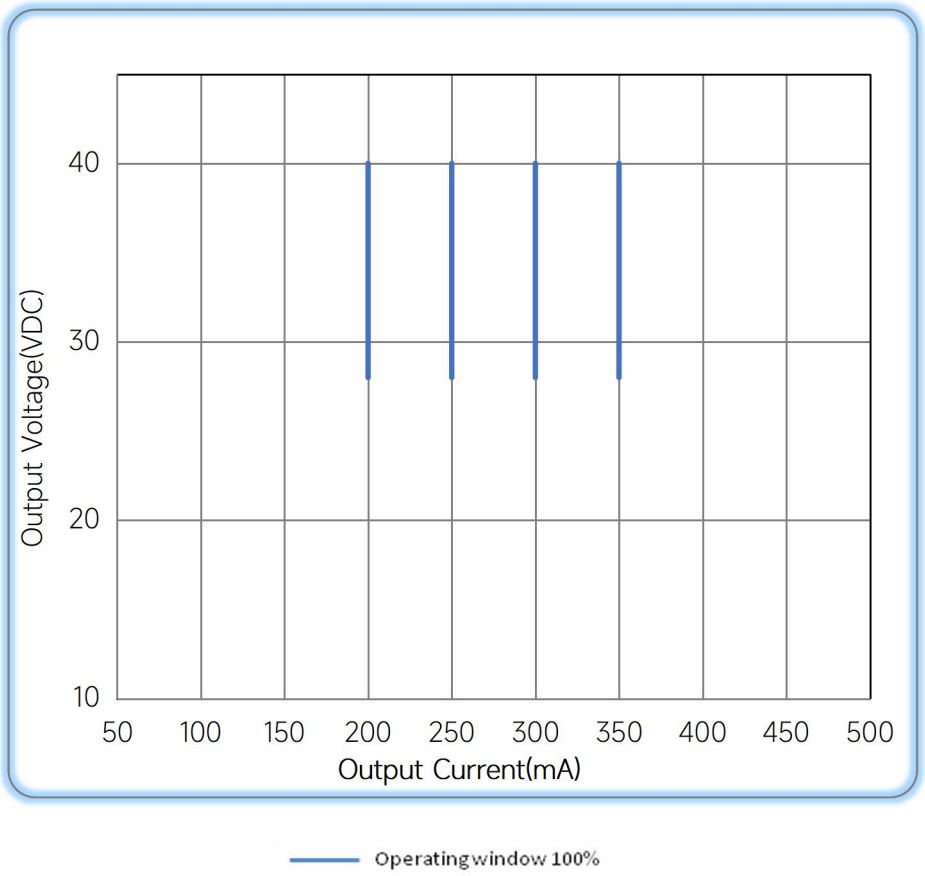

◆ Revision Updates

ITEM	BEFORE	AFTER	VERSION	DATE
Initial			A	2024/11/19

Remark:The final interpretation of the contents of the specification belongs to Eaglerise Electric & Electronic (China) Co., Ltd.