20W DALI + PUSH Dimming power supply

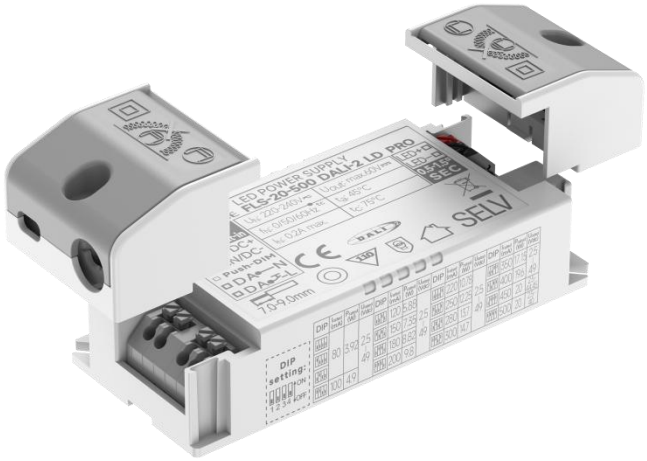

■Approve

Features

- For luminaries of protection Class Ⅱ, SELV, Built-in/Independent（With side caps）
- Input Voltage： 220-240VAC、176-280VDC
- Protections：SCP/OLP/OVP/OTP
- Power Factor： ＞0.95
- Efficiency：87%@full Load,230Vac
- Support DALI-2,Push Dimming
- Adjustable Output Current with DIP Switch
- Suitable for emergency lighting acc. to EN 50172
- EOFi=15%
- 22mm height
- DALI maintainace(Part 251,252,253)
- 5 years warranty

Applications

- LED panel、LED down light
  LED spot light

◆ Description

FLS-20-500 DALI-2 LD PRO is a 20W constant current LED driver that operates from 198-264Vac input with 80 to 500mA output current and a forward voltage range from 2.5 to 49Vdc. The output current is adjustable by DIP Switch. With it's compact dimensions from88 x 40 x 22mm it is easy to integrate in linear light products. To ensure trouble-free operation, protection is provided against output short circuit and over Load.

◆ Model code

FLS-20-500 DALI-2 LD PRO

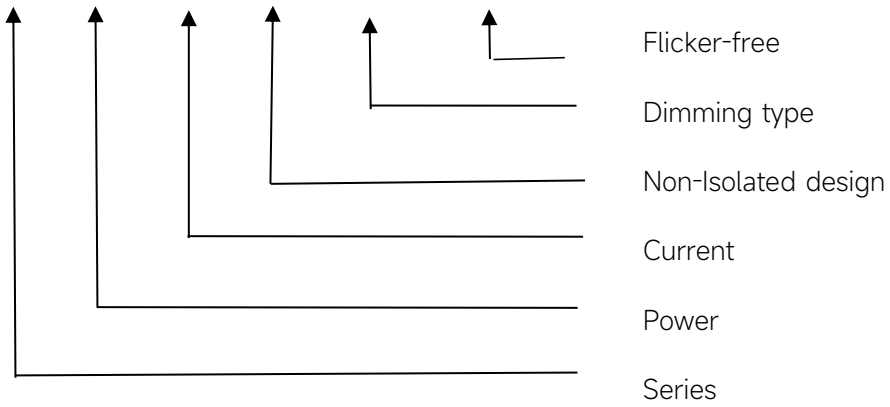

◆ Specification

Output	Constant Current (mA)	80-400mA	450mA	500mA
	Voltage Range(VDC)	2.5-49VDC	2.5-44.5VDC	2.5-40VDC
	Unload voltage Max.(VDC)	60VDC		
	Current Accuracy	±5%@ ＞100mA；±7% @ ≤100mA		
	[2]Output current ripple(≤120Hz)	±3%		
	SVM	≤0.4@Full Load		
	P_{st}	≤1@Full Load		
	Efficiency(Typ.)	87%@Full Load，230Vac		
	EOFI	15%		
Input	Rated input voltage(A)	220-240V		
	Range of input voltage(VAC)	198-264VAC		
	Maximum voltage	300VAC@1 h maximum,unit might not operate in this abnormal condition		
	Range of input voltage(VDC)	176-280VDC		
	Frequency(Hz)	0/50/60 Hz		
	Displacement Factor	≥0.9@full load, 230Vac		
	Power Factor	>0.95@full load，230Vac		
	Input Current max	0.20A max		
	Start-up time	＜0.8S		
	Switch over time(AC/DC mode)	＜0.5S		
	Standby Power	≤0.3W, @220Vac		
	Network Standby Power	≤0.3W,@220Vac		
	THD (Typ.)	＜10%@full load,230Vac		
Dimming	Dimming	YES		
	Dimming mode	DALI-2（IEC 62386-101,102,207,251,252,253） &Push Dimming (Corridor Function)		
	Dimming depth	3mA@80-300mA，1%@350-500mA		
	Dimming current range	1~100%		
	Dimming method	1%-12.5% @PWM dimming，12.5%-100% @AM dimming		
Protection	Over Load Protection	103-120%		
		YES/Latch off		
	Over Voltage Protection	60VDC		
		YES/Latch off		
	Short circuit Protection	YES/Latch off		
	Over Temperature Protection	YES/Auto Resume		
capability	Surge capability (L-N)	1KV		
	Surge capability (L/N-Ground)	2KV		
Environment	Operating Temperature	-20℃~+45℃		
	Humidity	20%-90%RH		

	Tc	75℃
	Storage Temperature	-40℃~+80℃
	Life time	＞50000h,@Tc=75℃
	Ripple&Noise	≤25dB(A)@20cm
Surface	Dimension	88 x 40 x 22 mm (With side caps) :122 x 40 x 22mm
	material	PC
Standards	Safety	GB19510. 1, GB19510. 14;IEC61347- 1, IEC61347-2- 13;AS/NZS 61347- 1, AS/NZS 61347-2- 13;AS 61347.2.13;EN62384;
	EMC	GB/T17743, GB17625. 1;EN55015, EN61000-3-2, EN61000-3-3, EN61547;EN55015, EN61000-3-2, EN61000-3-3, EN61547,EN 62493;EN61000-4-5;EN61000-4-2,3,4,5,6,8,11, EN61547
	ErP	Erp2.0 EU 2019/2020
	RoHS	RoHS (2011/65/EU) (EU)2015/863
DALI performance	EN 62386-101 (DALI-2) EN 62386-102 (DALI-2) EN 62386-207 (DALI-2,including part251,252,253)	
Note	1.All parameters not specially mentioned are measured at 230VAC input , full load and 25℃ of ambient temperature. 2.Ripple & Noise are measured at 20MHz of bandwidth by using a 300mm twisted pair-wire terminated with a 0.1uF & 47 uF parallel capacitor. 3.DALI protocol comprises 16 groups and 64 addresses.Up to 32 drivers can perform the PUSH dimming at the same time when utilizing one push button. 4.EL compatible with IEC 61347-2-13 Annex J, compatible with EN 60598-2-22 emergency lighting fixtures, compatible with EN 50172 central battery system applications. 5.The DC input for this product is only used for emergency lighting and applies to functional and safety requirements, EMC is not considered.	

◆ Parameter

Number	Output				Switch position			
	Current (mA)	Voltage (VDC)	Voltage No load (VDC)	Power (W)	1	2	3	4
1	80mA	2.5-49	60	3.9	--	--	--	--
2				3.9	ON	--	--	--
3				3.9	--	ON	--	--
4	100mA	2.5-49		4.9	ON	ON	--	--
5	120mA	2.5-49		5.9	--	--	ON	--
6	150mA	2.5-49		7.4	ON	--	ON	--
7	180mA	2.5-49		8.8	--	ON	ON	--
8	200mA	2.5-49		9.8	ON	ON	ON	--
9	220mA	2.5-49		10.8	--	--	--	ON
10	250mA	2.5-49		12.3	ON	--	--	ON
11	280mA	2.5-49		13.7	--	ON	--	ON
12	300mA	2.5-49		14.7	ON	ON	--	ON
13	350mA	2.5-49		17.2	--	--	ON	ON
14	400mA	2.5-49		19.6	ON	--	ON	ON
15	450mA	2.5-44.5		20	--	ON	ON	ON
*16	500mA	2.5-40		20	ON	ON	ON	ON

* Factory default

◆ Inrush Current

I^{peak}	Twidth	B10	B16	B20	C10	C16	C20
4.02A	**40μs**	40pcs	64pcs	80pcs	40pcs	64pcs	80pcs

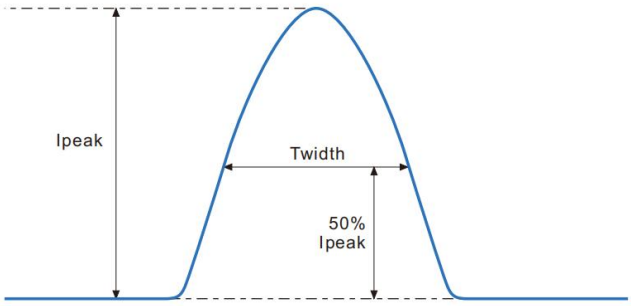

Remarks:

1.The number of drives mounted under different MCBs in the table is the maximum value. Please do not exceed this number during installation.

2.Different brands and models of miniature circuit breakers, the number of drives mounted will be slightly different.

◆ Wiring diagram

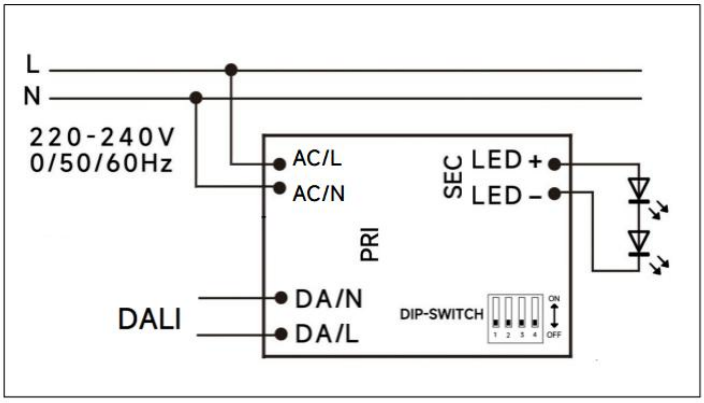

DALI dimming application

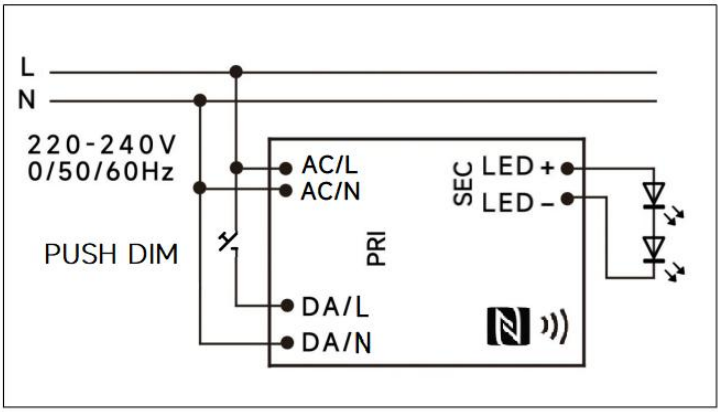

PushDIM dimming application

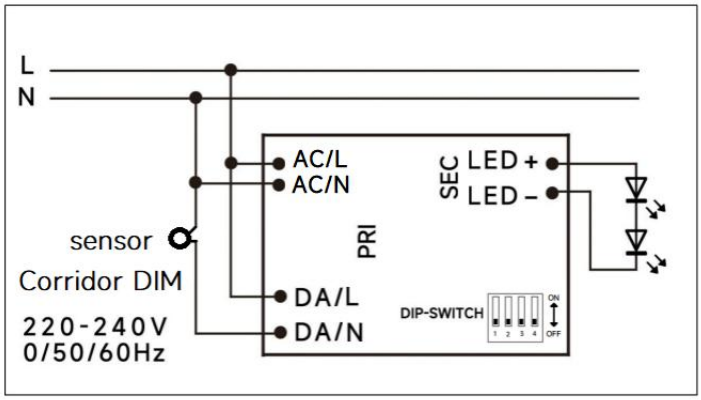

Corridor DIM dimming application

◆ 2D diagram

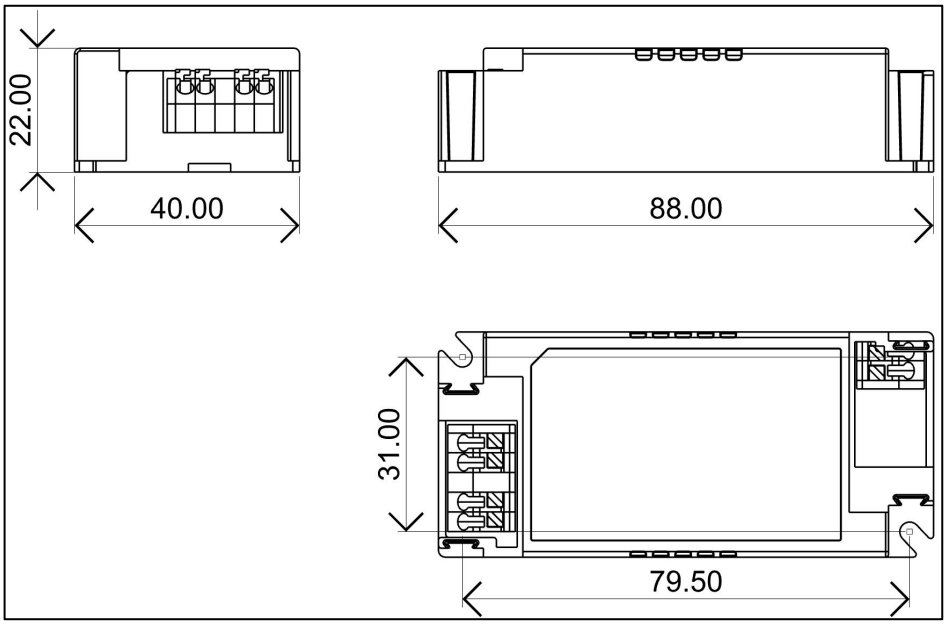

With side caps

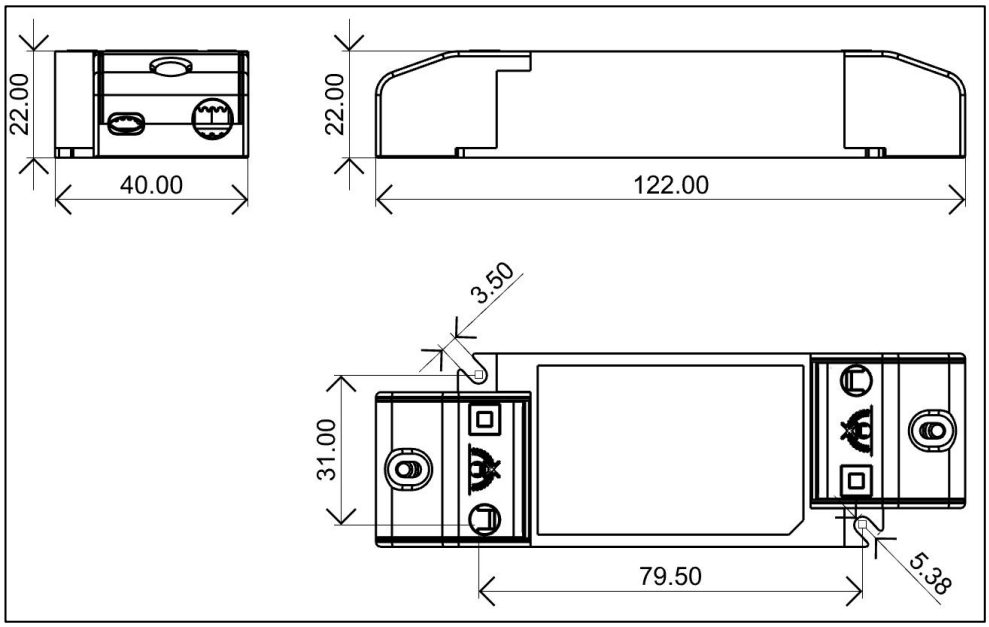

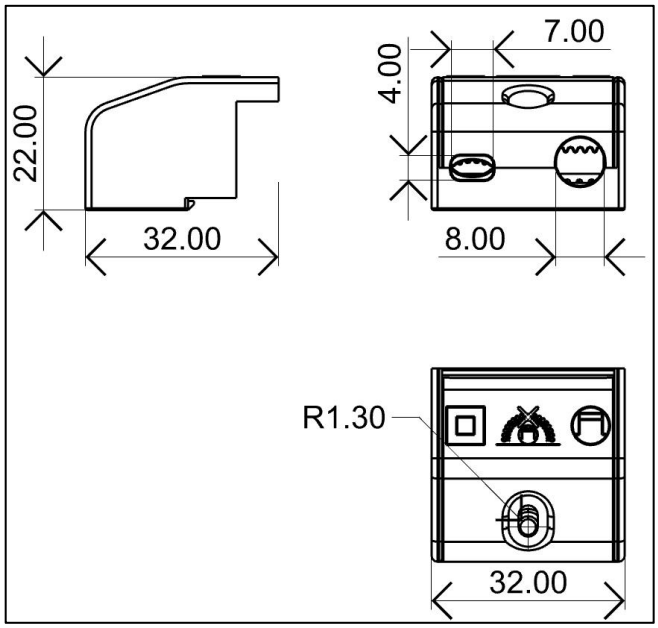

B caps

132021T0256	Small, Grey ,with "Don't Cover" mark
1270100280	Screws

Terminal

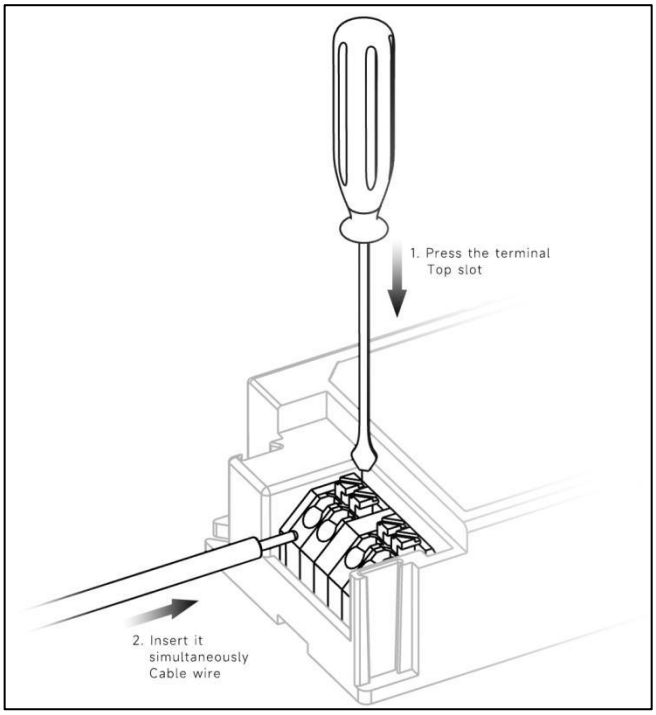

◆ Wiring & Connections

Specification item		Value （Unit ）
Input	Input wire cross-section	0.5...1.5 mm^2 （With side caps：0.75...1.5 mm^2）
	Input wire gauge.	16...20 AWG （With side caps：16...22 AWG ）
	Input wire strip length	7...9mm
Output	Output wire cross-section	0.5...1.5 mm^2
	Output wire gauge.	16...20 AWG
	Output wire strip length	7...9mm

◆ Recommended wire

Small side cap of small hole	Wire type
0.5mm^2	H03VVH2-F 2 core&3 core H03VV-F 2 core&3 core
0.75mm^2	H03VVH2-F 2 core&3 core H03VV-F 2 core&3 core H05VV-F 2 core
1.0mm^2	H05VVH2-F 2 core
1.5mm^2	CCC 08(RV-90)

Small side cap of big hole	Wire type
0.75mm^2	H05VV-F 2 core&3 core&4 core
1.0mm^2	H05VV-F 2 core&3core
1.5mm^2	H05VV-F 2 core&3core

Note:Solid wire is risky to use on an angled terminal.Stranded wire is recommended for this kind of use.

◆ Curve for FLS-20-500 DALI-2 LD PRO, Io=500mA

Lifetime vs. Temperature Curve

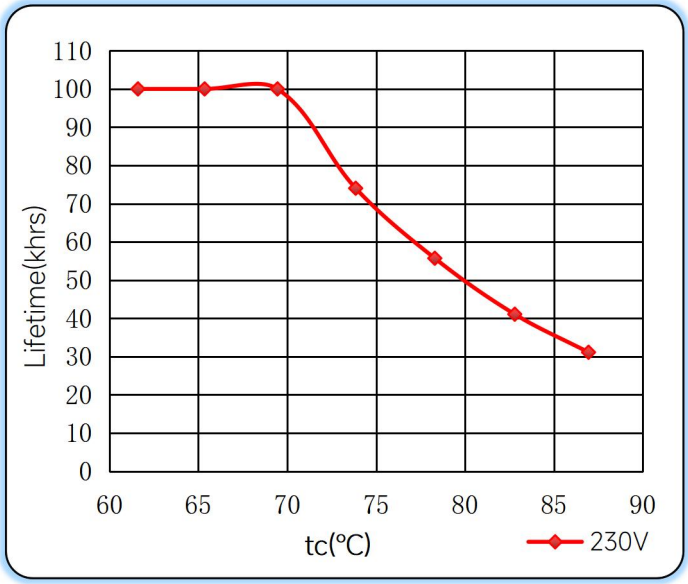

Efficiency vs. Load

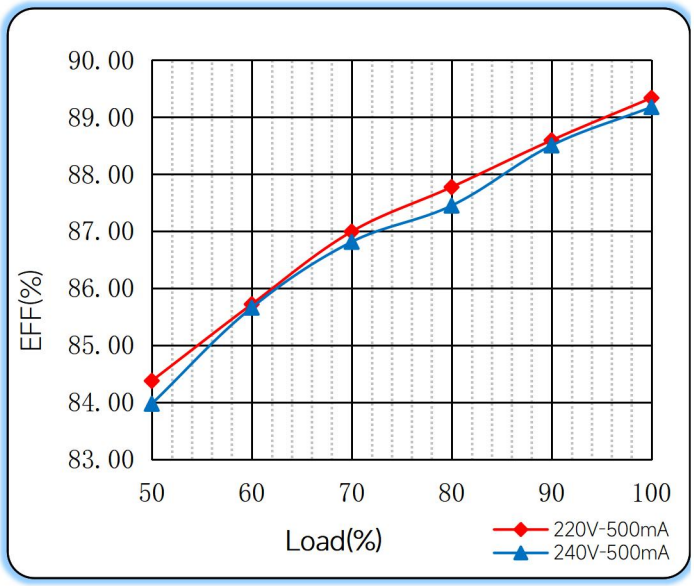

Power Factor Characteristics

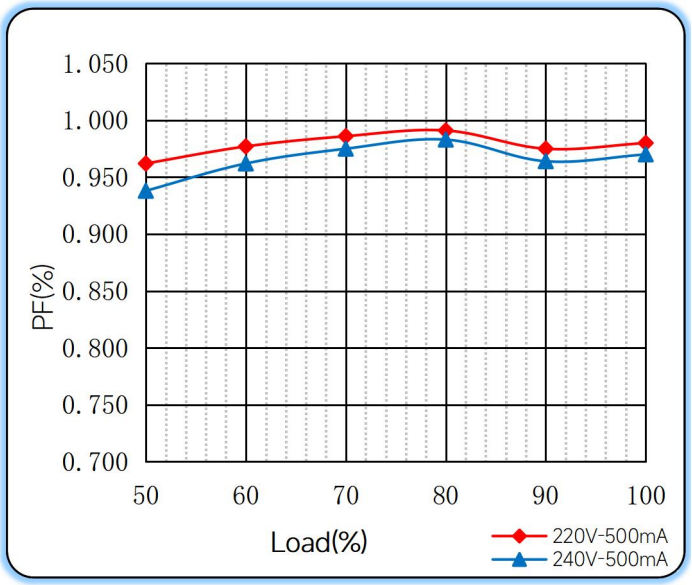

THD vs. Load

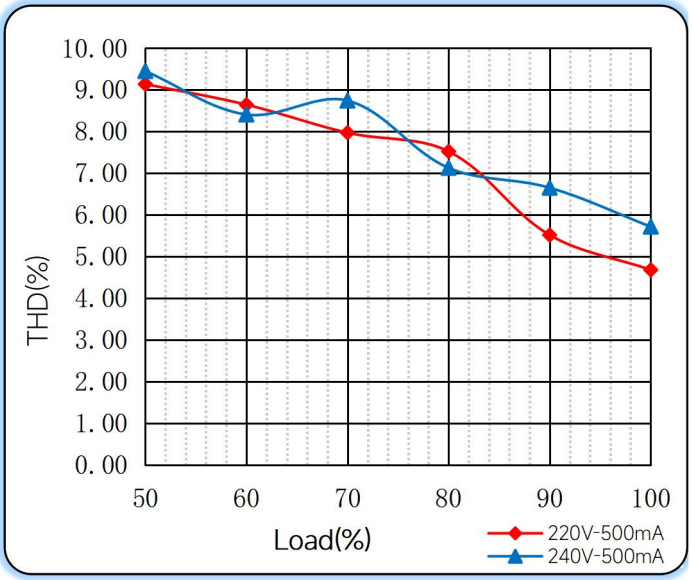

◆ Push dimming operation

Action	Action duration	Function
Short push	<0.5s	Turn on/off
Short push twice	<0.5s	LED on: Save current brightness level LED off: Delete saved level and turn on at 100% brightness
Short push five times	<3s	Quit Corridor mode
Long push	0.5-14s	Dimming up or down
Long push	15s-2mins	Sync all LEDs to be 100% brightness
Long push	>2mins	Enter Corridor mode - LED keep 100% brightness for 2mins. Then brightness will turn to be 10% within 32s if no action during 2mins 100% brightness.

Note:

1.The factory default brightness is at 100%.

2.Up to 30 drivers can perform the PUSH dimming at the same time when utilizing one common push button

3.The maximum length of the cable from the push button to the last driver is 200 meters.

◆ Corridor mode

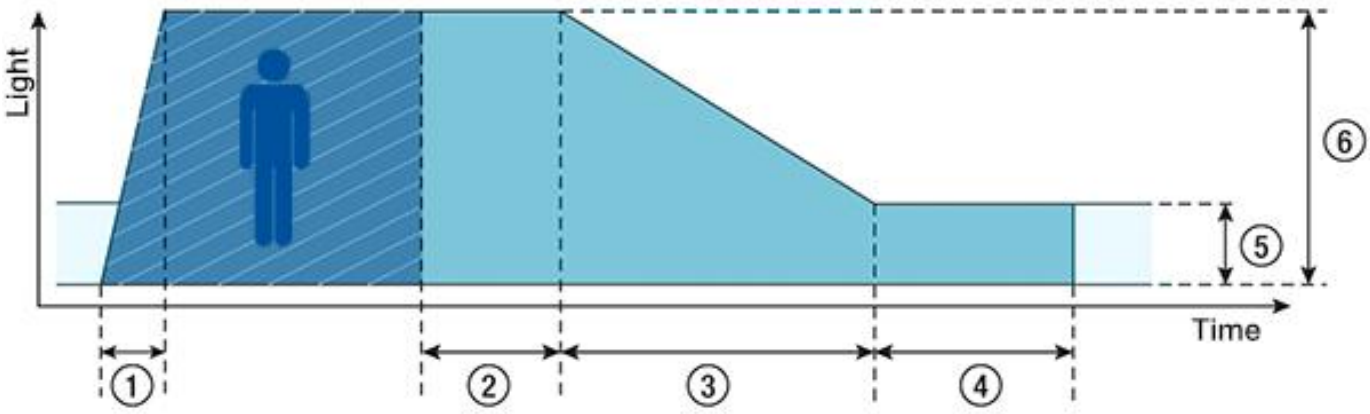

- **①Fade-in time(0.5s):** the time that starts as soon as the presence of a person is detected. During the fade-in time the luminous intensity is faded up to the presence value.
- **②Run-on time(120s):** the time that starts as soon as the presence of a person is no longer detected. If the presence of a person is detected again during the run-on time the run-on time is restarted from zero. If no presence is detected during the run-on time the fade time is started as soon as the run-on time expires.
- **③Fade time(32s):** the time during which the luminous intensity is faded from the presence value to the absence value.
- **④Switch-off delay（Never Off):** the time during which the absence value is held before the lighting is switched off. Depending on the profile selected the switch-off delay may have different values or may not be defined.
- **⑤Absence value(default: 10 %):** the luminous intensity when there is no person present.
- **⑥Presence value (default: 100 %):** the luminous intensity when persons are present.

◆ Operating window

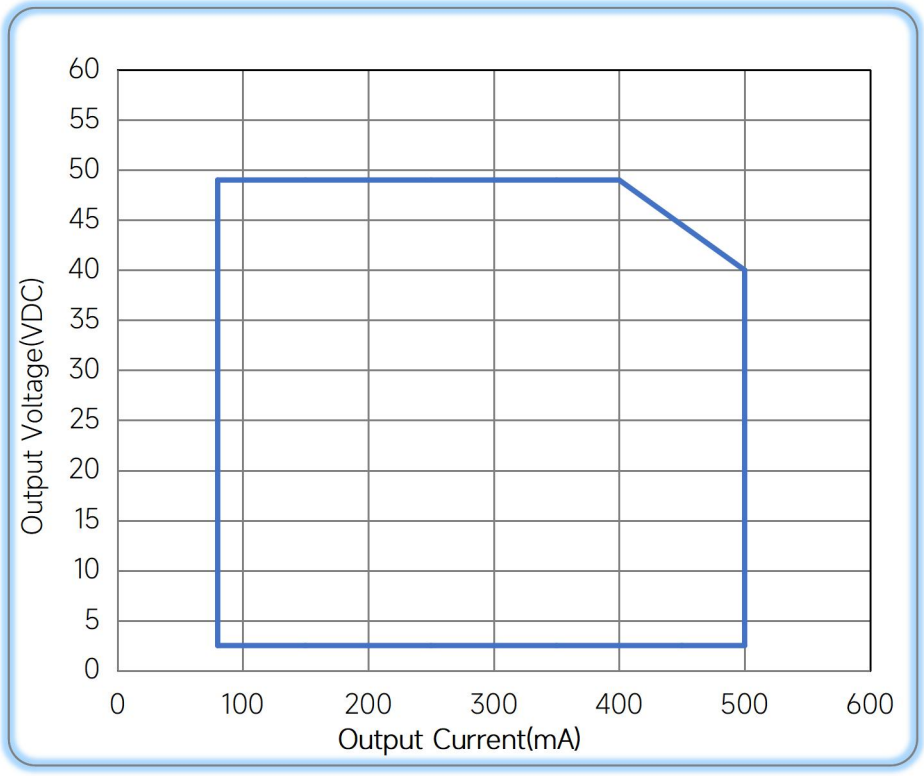

Operating window 100%

◆ Revision Updates

ITEM	BEFORE	AFTER	VERSION	DATE
Initial			A	2023/09/08
Tc	85℃	75℃	B	2023/11/24
Current Accuracy	±5%	±5%@ ＞100mA ;±7%@≤100mA	C	2024/05/08

Remark:The final interpretation of the contents of the specification belongs to Eaglerise Electric & Electronic (China) Co., Ltd.