30W Constant Current Power Supply

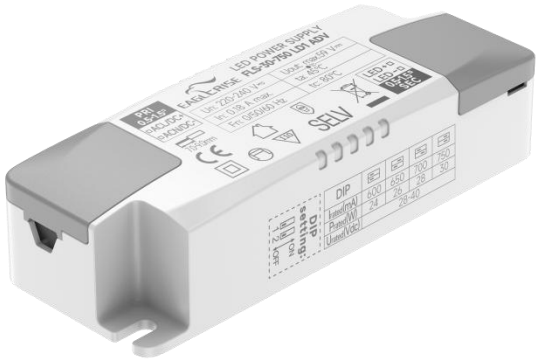

■Approve

CE CB EN EL SELV

Features

- For luminaries of protection Class II, SELV, Independent
- Input Voltage: 220-240VAC
- Protections: SCP/OLP/OVP/OTP
- Power Factor: ≥0.95(Typ.)
- Efficiency: ≥94%(Typ.)
- Adjustable Output Current with dip-switch
- 5 years warranty
- IP20

Applications

- LED panel、LED down light

◆ Description

FLS-30-750 LD1 ADV is a 30W constant current LED driver with 600 to 750mA output current and a forward voltage range from 28 to 40Vdc. The output current is adjustable by DIP Switch. With it's compact dimensions from 116 x 41 x 26 mm. It is easy to integrate in LED Panel and down light products. The side covers are available as accessories and allow to use the LED driver independent.

◆ Model code

FLS-30-750 LD1 ADV

- Flicker-free
- Current
- Power
- Series

◆ Specification

Output	Constant Current (mA)	600mA	650mA	700mA	750mA
	Voltage Range(VDC)	28-40V			
	Unload voltage Max.(VDC)	59V			
	Current Accuracy	±5%			
	Output LF current ripple(≤120Hz)	≤±3%			
	SVM	≤0.4			
	Pst	≤1			
	Efficiency(Typ.)	≥94% @Full Load,230V			
Input	Rated input voltage(VAC)	220-240V			
	Range of input voltage(VAC)	198-264VAC			
	Maximum voltage	300VAC@1 h maximum,unit might not operate in this abnormal condition			
	Range of input voltage(VDC)	176-280VDC			
	Frequency(Hz)	0/50/60 Hz			
	Displacement factor	≥0.95 @Full Load,230V			
	Power Factor	≥0.95 @Full Load,230V			
	Input Current max	0.18AMax			
	Start-up time	＜0.5S			
	No Load Power	≤0.5W			
	THD (Typ.)	<10% @Full Load,230V			
Protection	Over Load Protection	103-120%			
		YES/Auto Resume			
	Over Voltage Protection	>59V			
		YES/Auto Resume			
	Short circuit Protection	YES/Auto Resume			
capability	Surge capability (L-N)	1KV			
	Surge capability (L/N-Ground)	NA			
Environment	Operating Temperature	-20℃~+45℃			
	Humidity	20%-90%RH			
	Tc	80℃			
	Storage Temperature	-25℃~+60℃			
	Life time	＞50000h@Tc=80℃			
	Ripple&Noise	≤20dB(A)@10cm			
Surface	Dimension	116X41X26mm			
	material	PC			
Standards	Safety	GB19510. 1, GB19510. 14;IEC61347- 1, IEC61347-2- 13;EN61347- 1, EN61347-2-13; EN62384;			
	EMC	GB/T17743, GB17625. 1;EN55015, EN61000-3-2, EN61000-3-3, EN61547;EN61000-4-2,3,4,5,6,8,11, EN61547;EN61000-4-5			

	Energy Efficiency	Erp2.0 EU 2019/2020
	RoHS	RoHS (2011/65/EU) (EU)2015/863
Note	1.All parameters not specially mentioned are measured at 230VAC input , full load and 25℃ of ambient temperature. 2.Ripple & Noise are measured at 20MHz of bandwidth by using a 300mm twisted pair-wire terminated with a 0.1uF & 47 uF parallel capacitor. 3.Switch and dimmer are not recommended to connect between this product output and luminaries. 4.The DC input for this product is only used for emergency lighting and applies to functional and safety requirements, EMC is not considered. 5.The over-temperature protection of the product is provided by the IC. 6.All Eaglerise power supply are complied with EMI regulations. Since they are belong to component and will be installed inside system enclosure. When they are integrated into a system, the EMI characteristics of the system must be re-verified again.	

◆ Parameter

Number	Output				Switch position	
	Current (mA)	Voltage (VDC)	Voltage No load (VDC)	Power (W)	1	2
1	600mA	28-40VDC	59	24	--	--
2	650mA			26	ON	--
3	700mA			28	--	ON
*4	750mA			30	ON	ON

* Factory default

◆ Inrush Current

I^{peak}	Twidth	B10	B16	B20	C10	C16	C20
34A	**121.6μs**	20pcs	32pcs	40pcs	34pcs	54pcs	68pcs

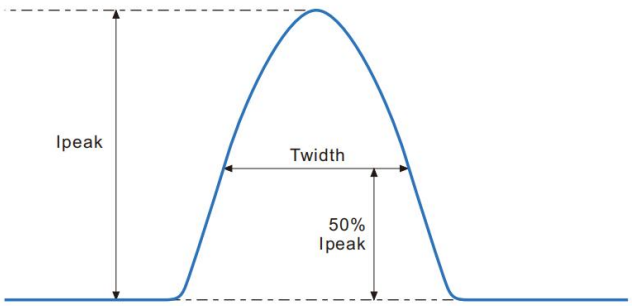

Remarks:

1.The number of drives mounted under different MCBs in the table is the maximum value. Please do not exceed this number during installation.

2.Different brands and models of miniature circuit breakers, the number of drives mounted will be slightly different.

◆ Wiring diagram

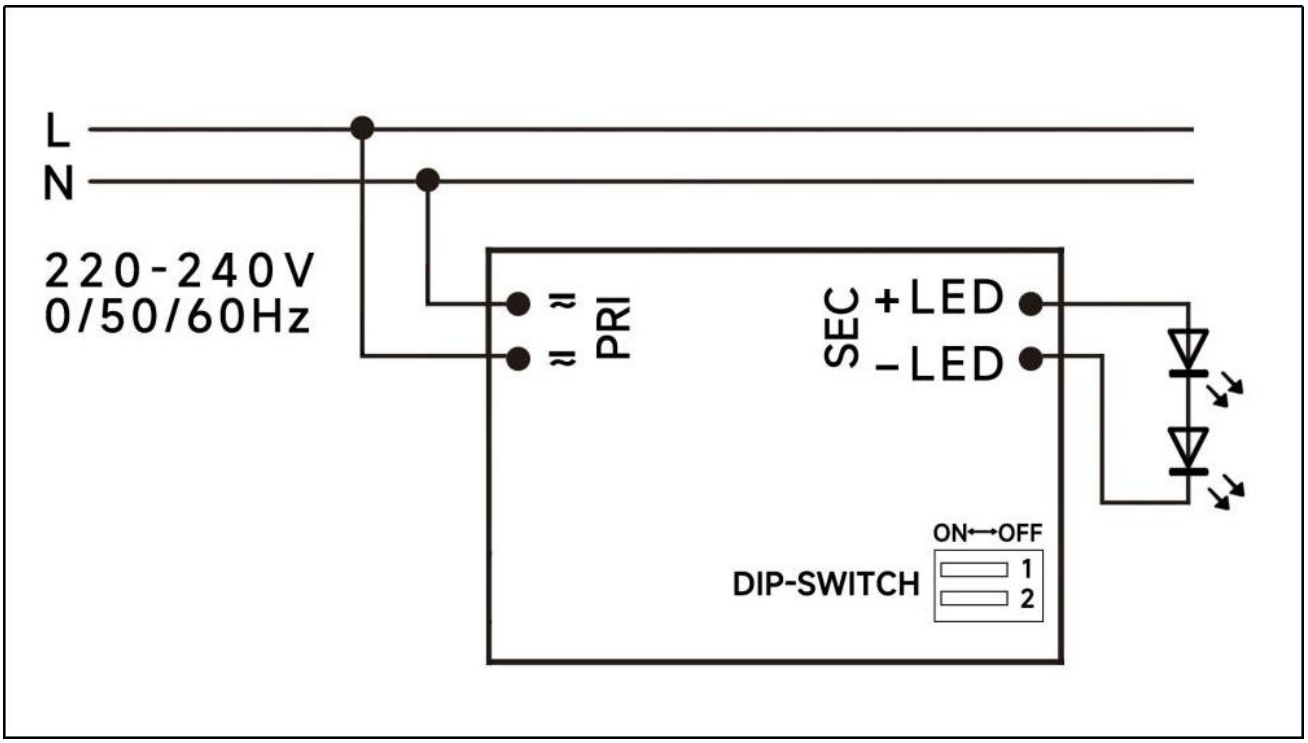

◆ 2D diagram

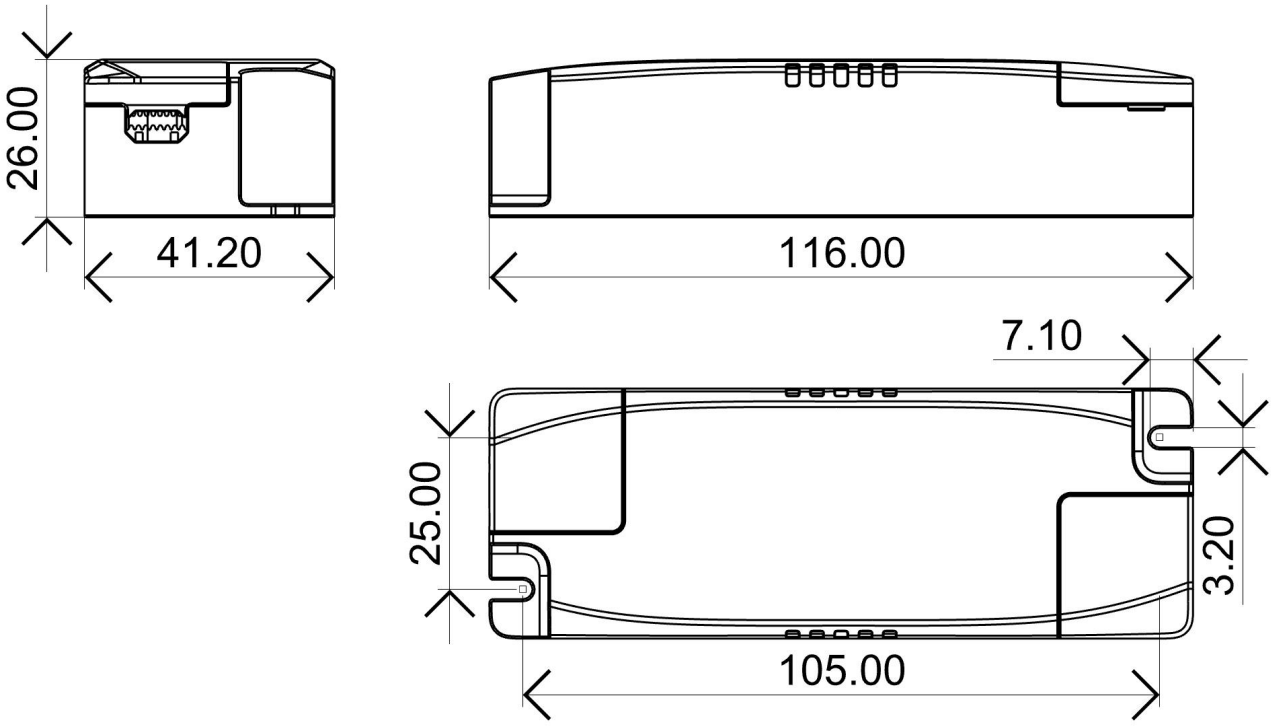

◆ Wiring & Connections

Specification item		Value （Unit ）
Input	Input wire cross-section	0.5...1.5 mm^2
	Input wire gauge.	16...20 AWG
	Input wire strip length	7...9mm
Output	Output wire cross-section	0.5...1.5 mm^2
	Output wire gauge.	16...20 AWG
	Output wire strip length	7...9mm

Note:Solid wire is risky to use on an angled terminal.Stranded wire is recommended for this kind of use.

◆ Packaging

Model	Product Dimensions(mm)	weight/piece	Outer carton dimension(mm)	Quantity/carton	Net weight/carton(Kg)	Gross weight/carton(Kg)
FLS-30-750 LD1 ADV	116X41X26mm	0.08	370X275X215mm	126	10.08	10.75

◆ Curve for FLS-30-750 LD1 ADV, Io=750mA

Lifetime vs. Temperature Curve

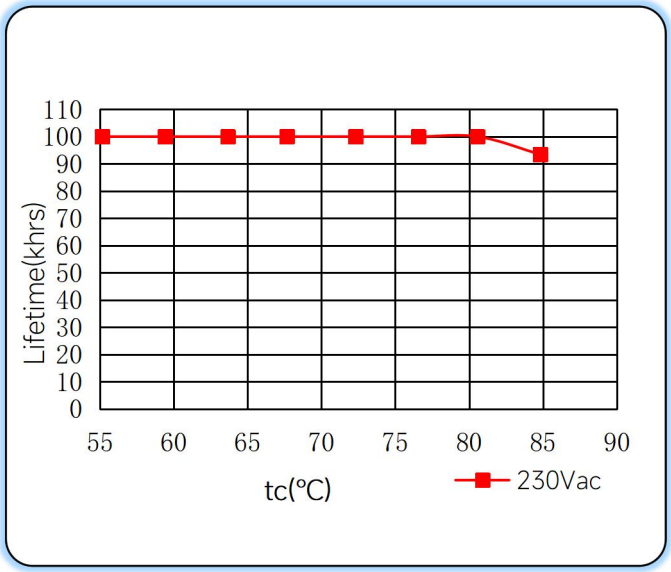

Efficiency vs. Load

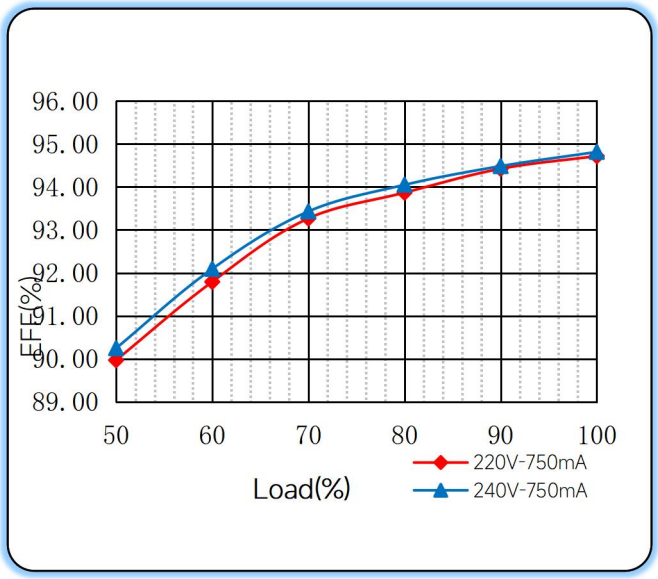

Power Factor Characteristics

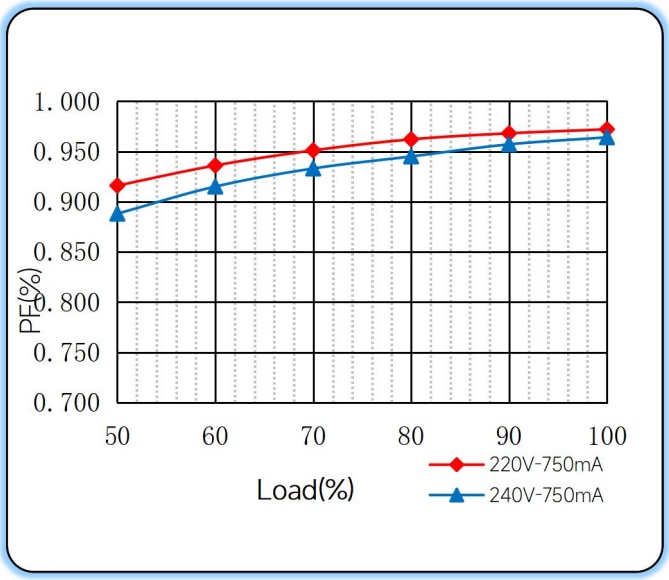

THD vs. Load

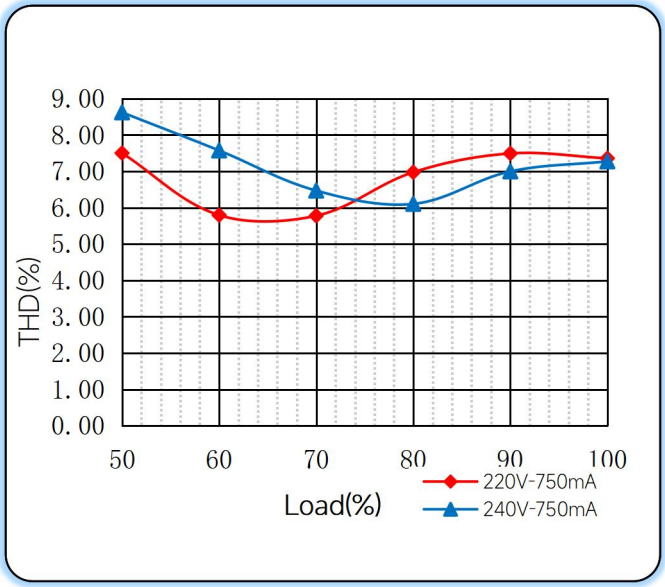

◆ Operating window

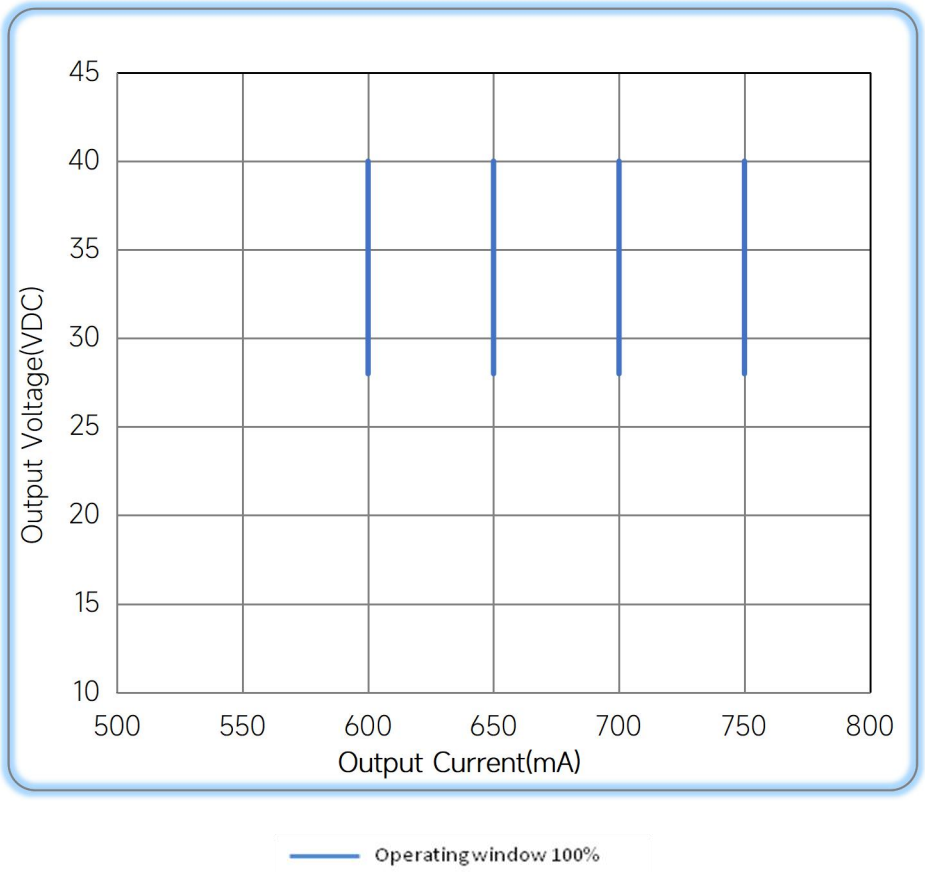

◆ Revision Updates

ITEM	BEFORE	AFTER	VERSION	DATE
Initial			A	2024/11/19

Remark:The final interpretation of the contents of the specification belongs to Eaglerise Electric & Electronic (China) Co., Ltd.