42W DALI + PUSH Dimming power supply

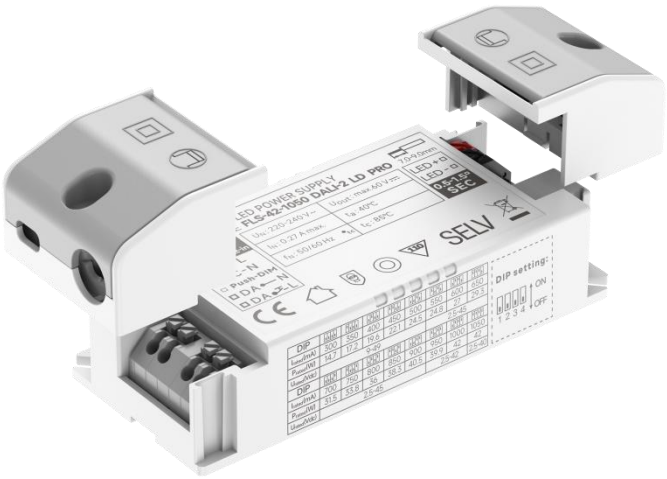

Features

- For luminaries of protection Class I, II, SELV, Built-in/Independent (With side caps)
- Input Voltage: 220-240VAC、176-280VDC
- Protections: SCP/OLP/OVP/OTP
- Power Factor: > 0.95
- Efficiency: 90%@900mA,full Load,230Vac
- Support DALI-2,Push Dimming
- Suitable for emergency lighting acc. to EN 50172
- EOFi=100%
- 22mm height
- DALI maintainace(Part 251,252,253)
- 5 years warranty

Applications

- LED panel、LED down light
  LED spot light

■Approve

◆ Description

FLS-42-1050 DALI-2 LD PRO is a 42W constant current LED driver with 300 to 1050mA output current and a forward voltage range from 2.5 to 49Vdc. The output current is adjustable by DIP Switch. With it's dimensions from 98 x 43 x 22mm. It is easy to integrate in LED Panel and down light products. To ensure trouble-free operation, protection is provided against output short circuit and over Load.

◆ Model code

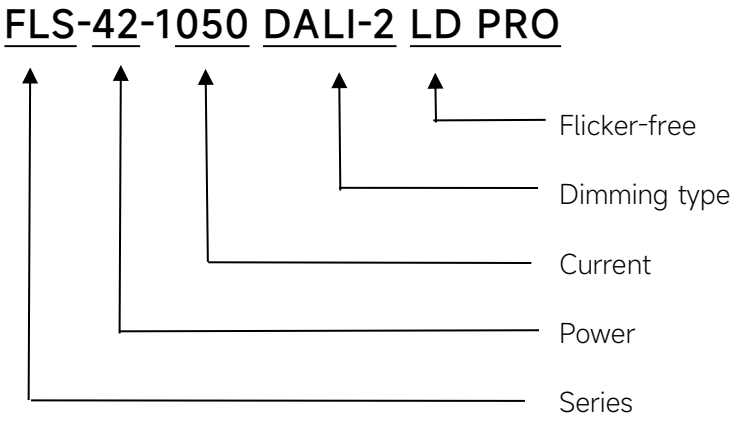

Stock code : 002922

◆ Specification

Output	Constant Current (mA)	300-500mA	550-900mA	950-1000mA	1050mA
	Voltage Range(VDC)	9-49VDC	2.5-45VDC	2.5-42VDC	2.5-40VDC
	Unload voltage Max.(VDC)	60VDC			
	Current Accuracy	±5%			
	[2]Output current ripple(≤120Hz)	±3%			
	SVM	≤0.4@Full Load			
	P_{st}	≤1@Full Load			
	Efficiency(Typ.)	90%@900mA,full Load,230Vac			
	EOFI	100%			
Input	Rated input voltage(VAC)	220-240VAC			
	Range of input voltage(VAC)	198-264VAC			
	Maximum voltage	300VAC@1 h maximum,unit might not operate in this abnormal condition			
	Range of input voltage(VDC)	176-280VDC			
	Frequency(Hz)	0/50/60 Hz			
	Displacement Factor	≥0.9@full load, 230Vac			
	Power Factor	>0.95@full load，230Vac			
	Input Current max	0.27A max			
	Start-up time(AC mode)	＜0.8S			
	Start-up time(DC mode)	＜0.6S			
	Switch over time(AC/DC mode)	＜0.6S			
	Standby Power	≤0.3W, @220Vac			
	Network Standby Power	≤0.3W,@220Vac			
	THD (Typ.)	＜10%@full load,230Vac			
Dimming	Dimming	YES			
	Dimming mode	DALI-2（IEC 62386-101,102,207,251,252,253） &Push Dimming (Corridor Function)			
	Dimming depth	7mA@300-700mA，1%@750-1050mA			
	Dimming current range	1~100%			
	Dimming method	1%-12.5% @PWM dimming，12.5%-100% @AM dimming			
Protection	Over Load Protection	103-120%			
		YES/Latch off			
	Over Voltage Protection	60VDC			
		YES/Latch off			
	Short circuit Protection	YES/Latch off			
	Over Temperature Protection	YES/Auto Resume			
capability	Surge capability (L-N)	1KV			
	Surge capability (L/N-Ground)	2KV			
Environment	Operating Temperature	-20℃~+40℃@1000-1050mA -20℃~+45℃@300-950mA			

	Humidity	20%-90%RH
	Tc	85℃
	Storage Temperature	-40℃~+80℃
	Life time	＞50000h,@TC=80℃
	Noise	≤25dB(A)@20cm
Surface	Dimension	98 x 43 x 22 mm (With side caps) : 132 X43X22mm
	material	PC
Standards	Safety	GB19510. 1, GB19510. 14;IEC61347- 1, IEC61347-2- 13;AS/NZS 61347- 1, AS/NZS 61347-2- 13;AS 61347.2.13;EN62384;
	EMC	GB/T17743, GB17625. 1;EN55015, EN61000-3-2, EN61000-3-3, EN61547;EN55015, EN61000-3-2, EN61000-3-3, EN61547,EN 62493;EN61000-4-5;EN61000-4-2,3,4,5,6,8,11, EN61547
	Energy Efficiency	Erp2.0 EU 2019/2020
	RoHS	RoHS (2011/65/EU) (EU)2015/863
DALI performance	EN 62386-101 (DALI-2) EN 62386-102 (DALI-2) EN 62386-207 (DALI-2,including part251,252,253)	
Note	1.All parameters not specially mentioned are measured at 230VAC input , full load and 25℃ of ambient temperature. 2.Ripple & Noise are measured at 20MHz of bandwidth by using a 300mm twisted pair-wire terminated with a 0.1uF & 47 uF parallel capacitor. 3.DALI protocol comprises 16 groups and 64 addresses.Up to 32 drivers can perform the PUSH dimming at the same time when utilizing one push button. 4.The DC input for this product is only used for emergency lighting and applies to functional and safety requirements, EMC is not considered.	

◆ Parameter

Number	Output				Switch position			
	Current (mA)	Voltage (VDC)	Voltage No load (VDC)	Power (W)	1	2	3	4
1	300mA	9-49 VDC	60VDC	14.7W	--	--	--	--
2	350mA			17.2W	ON	--	--	--
3	400mA			19.6W	--	ON	--	--
4	450mA			22.1W	ON	ON	--	--
5	500mA			24.5W	--	--	ON	--
6	550mA	2.5-45VDC		24.8W	ON	--	ON	--
7	600mA			27W	--	ON	ON	--
8	650mA			29.3W	ON	ON	ON	--
9	700mA			31.5W	--	--	--	ON
10	750mA			33.8W	ON	--	--	ON
11	800mA			36W	--	ON	--	ON

12	850mA			38.3W	ON	ON	--	ON
13	900mA			40.5W	--	--	ON	ON
14	950mA	2.5-42VDC		39.9W	ON	--	ON	ON
15	1000mA			42W	--	ON	ON	ON
*16	1050mA	2.5-40VDC		42W	ON	ON	ON	ON

* Factory default

◆ Inrush Current

I_{peak}	Twidth	B10	B16	B20	C10	C16	C20
6.12A	36μs	29pcs	47pcs	59pcs	29pcs	47pcs	59pcs

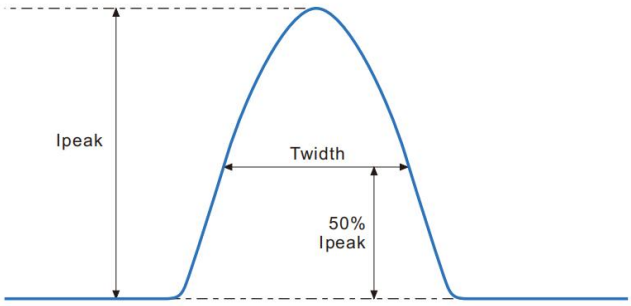

Remarks:

1.The number of drives mounted under different MCBs in the table is the maximum value. Please do not exceed this number during installation.

2.Different brands and models of miniature circuit breakers, the number of drives mounted will be slightly different.

◆ Wiring diagram

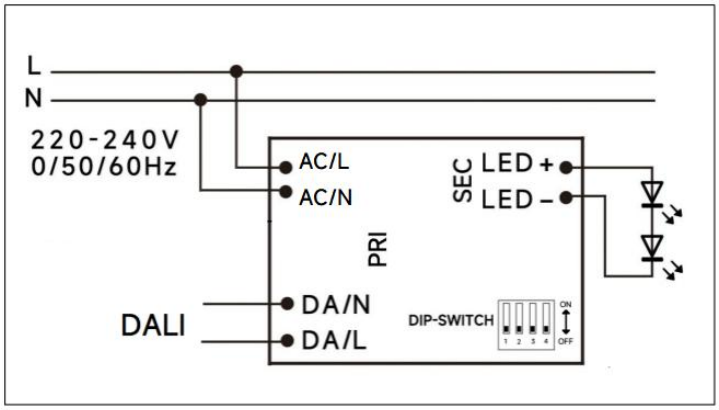

DALI dimming application

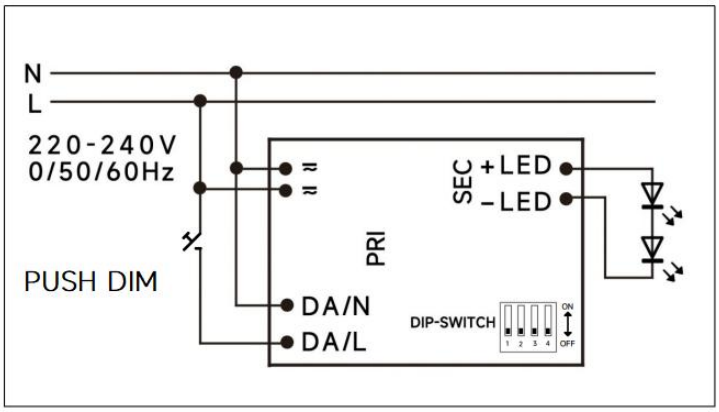

Push DIM dimming application

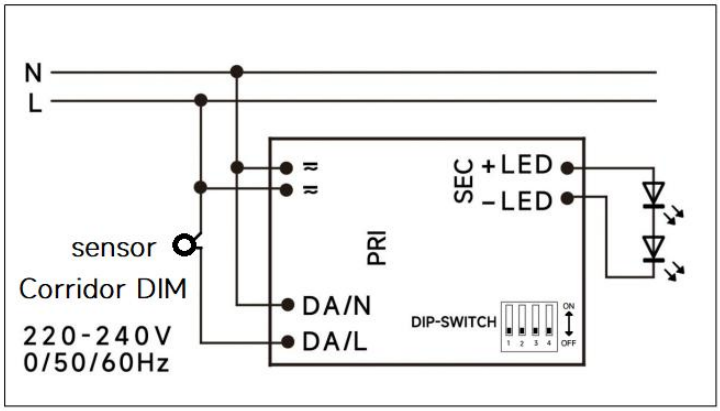

Corridor DIM dimming application

◆ 2D diagram

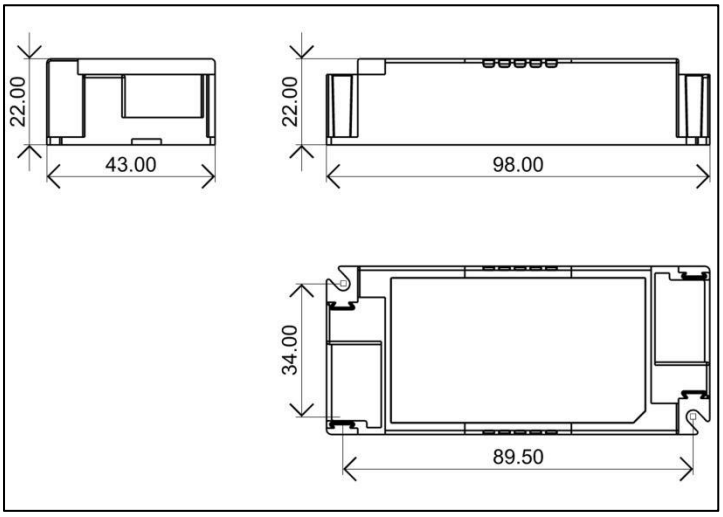

With side caps

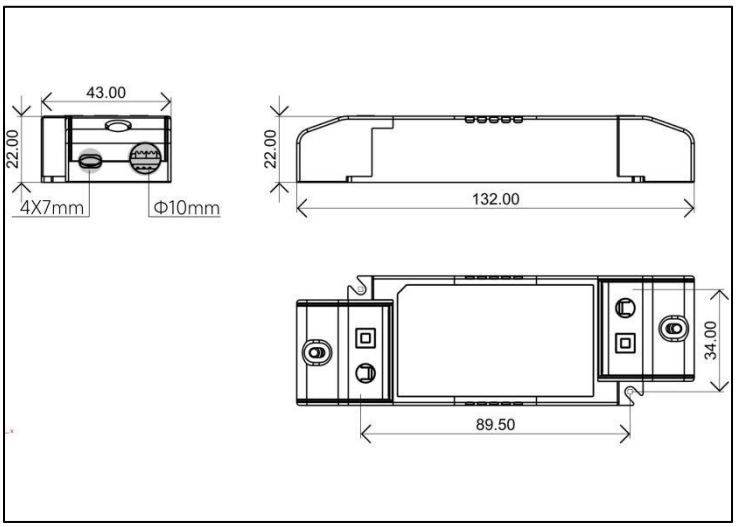

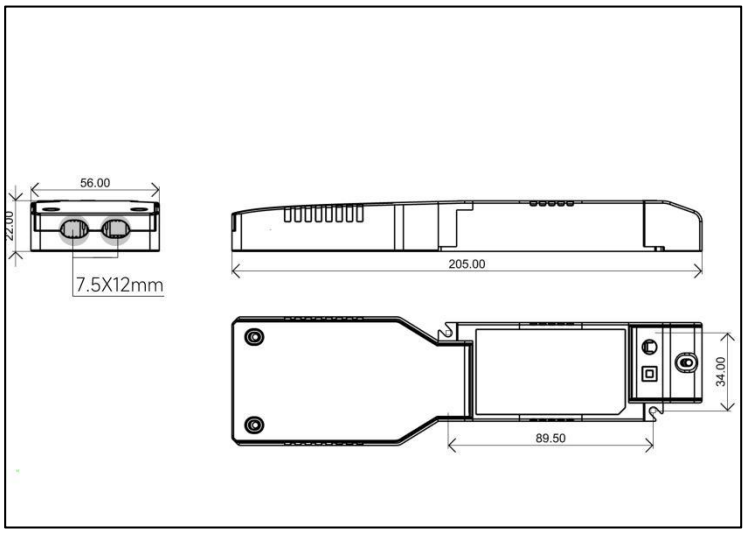

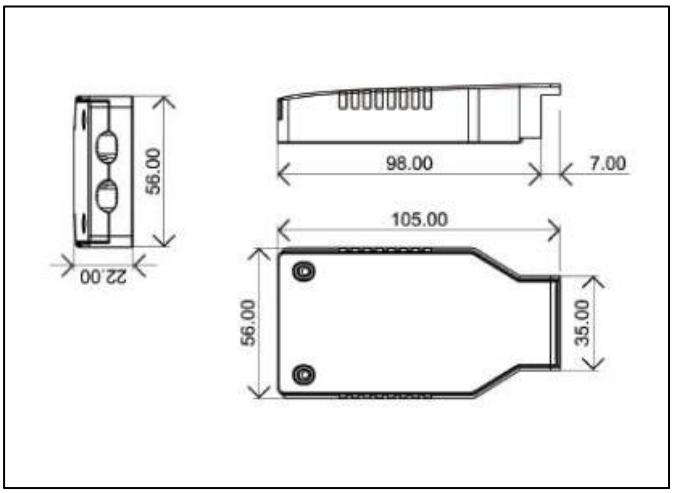

A caps

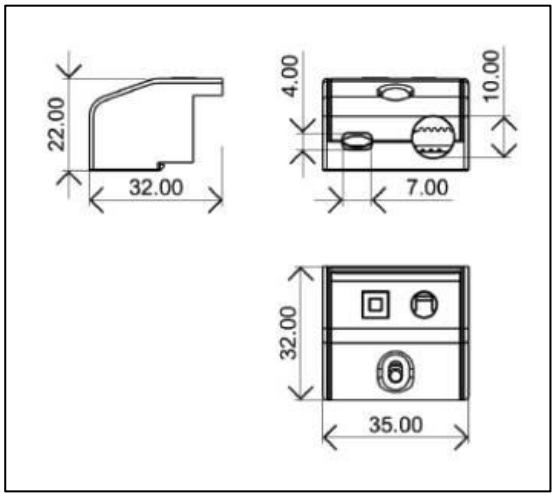

B caps

132021T0209	Top,Grey Side Cap and Bottom
132021T0209-2	Top,White Side Cap and Bottom
1270100280	Screws for Big Side Cap
126016T0009	5P Terminal for Big Side Cap

132021T0198	Top,Grey,without"Don't Cover" mark+Bottom,White
132021T0198-1	Top,Grey,with"Don't Cover" mark+Bottom ,Big,White
132021T0198-3	Top,White,with"Don't Cover" mark+ Side Cap Bottom ,White
1270100280	Screws

Terminal

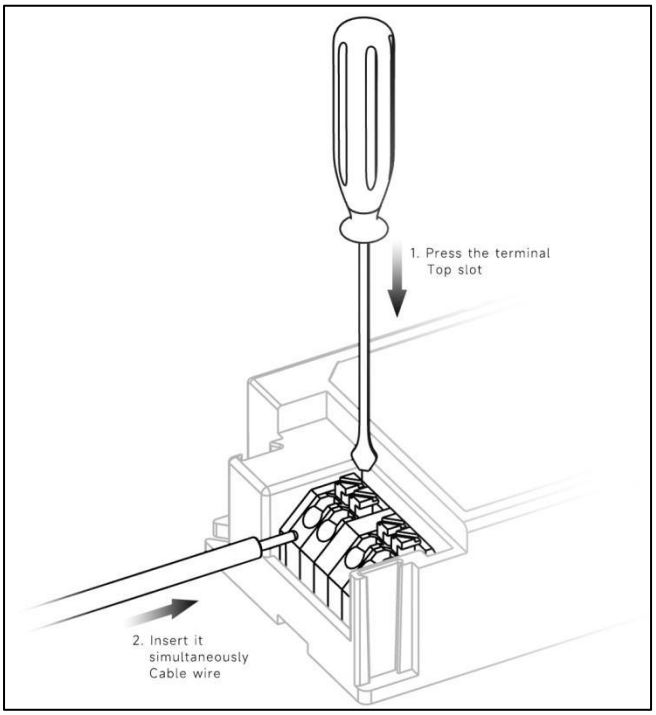

◆ Wiring & Connections

Specification item		Value （Unit ）
Input	Input wire cross-section	0.5...1.5 mm^2 （With side caps：0.75...1.5 mm^2）
	Input wire gauge.	16...20 AWG （With side caps：16...22 AWG ）
	Input wire strip length	7...9mm
Output	Output wire cross-section	0.5...1.5 mm^2
	Output wire gauge.	16...20 AWG
	Output wire strip length	7...9mm

◆ Recommended wire

Small side cap of small hole	Wire type
0.5mm^2	H03VVH2-F 2 core&3 core H03VV-F 2 core&3 core
0.75mm^2	H03VVH2-F 2 core&3 core H03VV-F 2 core&3 core H05VV-F 2 core
1.0mm^2	H05VVH2-F 2 core
1.5mm^2	CCC 08(RV-90)

Small side cap of big hole	Wire type
0.75mm^2	H05VV-F 2 core&3 core&4 core
1.0mm^2	H05VV-F 2 core&3core
1.5mm^2	H05VV-F 2 core&3core

Big side cap	Wire type
0.5mm^2	H03VVH2-F 2 core&3 core H03VV-F 2 core&3 core
0.75mm^2	H03VVH2-F 2 core&3 core H03VV-F 2 core&3 core H05VV-F 2 core&3 core&4 core
1.0mm^2	H05VVH2-F 2 core&3 core
1.5mm^2	CCC 08(RV-90) H05VV-F 2 core&3core

Note:Solid wire is risky to use on an angled terminal.Stranded wire is recommended for this kind of use.

◆ Curve for FLS-42-1050 DALI-2 LD PRO, Io=1050mA

Lifetime vs. Temperature Curve

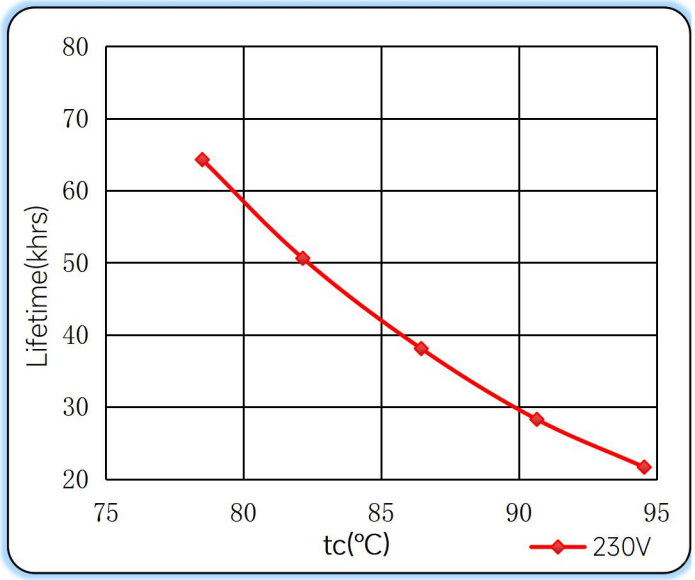

Efficiency vs. Load

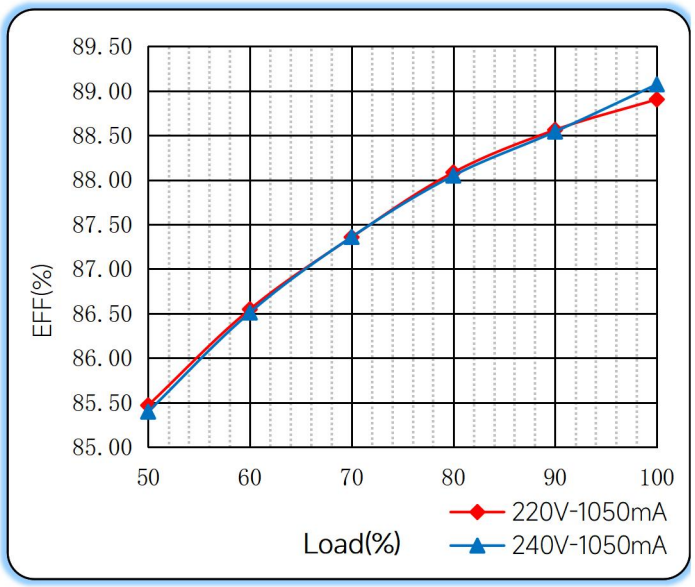

Power Factor Characteristics

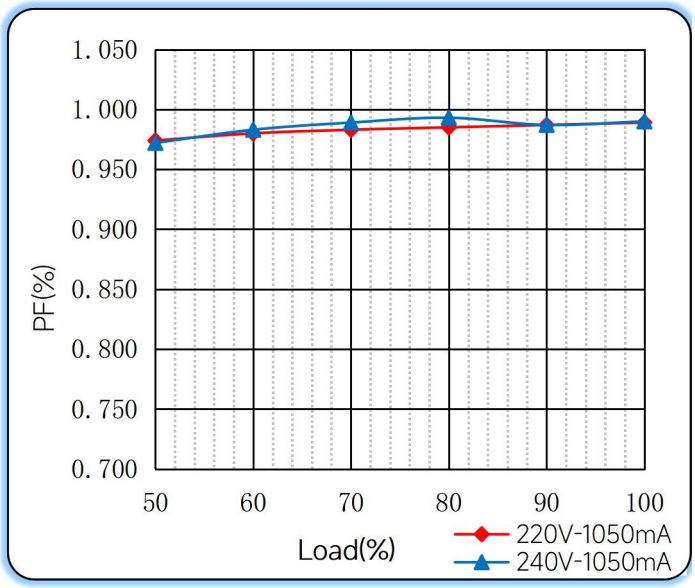

THD vs. Load

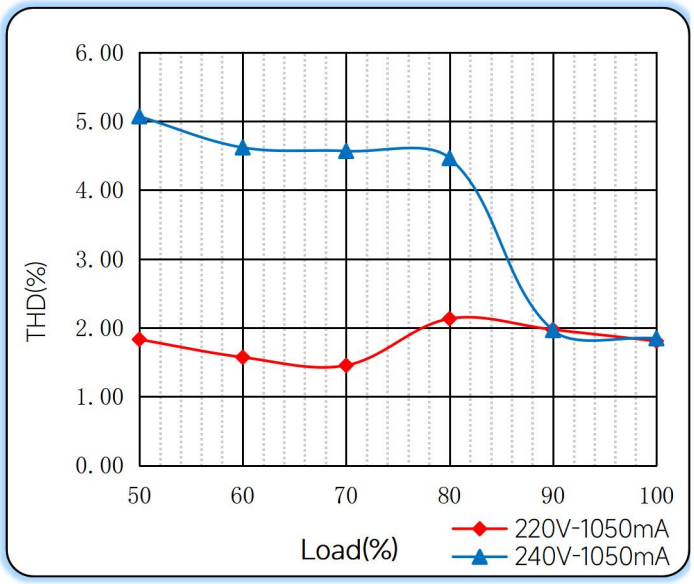

◆ Push dimming operation

Action	Action duration	Function
Short push	<0.5s	Turn on/off
Short push twice	<0.5s	LED on: Save current brightness level LED off: Delete saved level and turn on at 100% brightness
Short push five times	<3s	Quit Corridor mode
Long push	0.5-14s	Dimming up or down
Long push	15s-2mins	Sync all LEDs to be 100% brightness
Long push	>2mins	Enter Corridor mode - LED keep 100% brightness for 2mins. Then brightness will turn to be 10% within 32s if no action during 2mins 100% brightness.

Note:

1.The factory default brightness is at 100%.

2.Up to 30 drivers can perform the PUSH dimming at the same time when utilizing one common push button

3.The maximum length of the cable from the push button to the last driver is 200 meters.

◆ Corridor mode

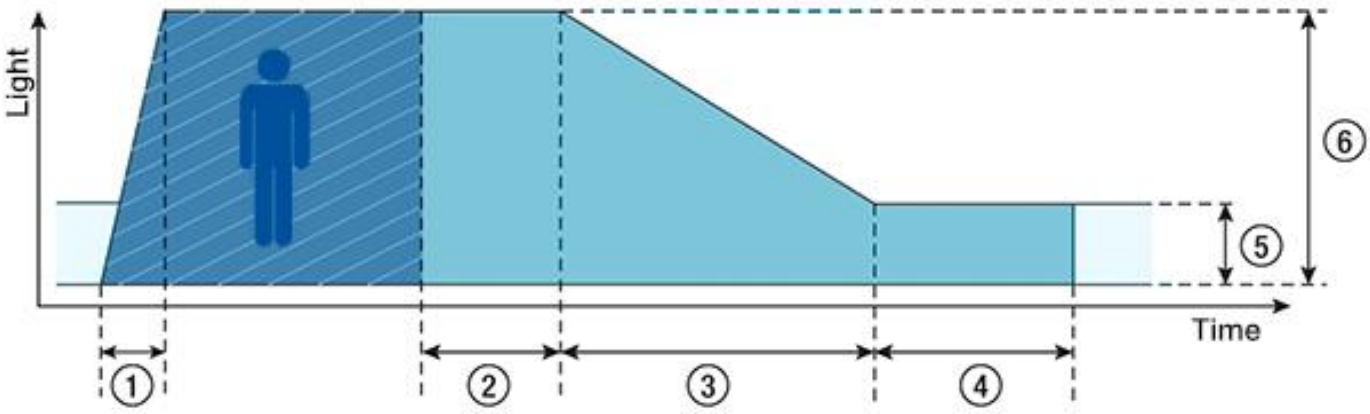

- **①Fade-in time(0.5s):** the time that starts as soon as the presence of a person is detected. During the fade-in time the luminous intensity is faded up to the presence value.
- **②Run-on time(120s):** the time that starts as soon as the presence of a person is no longer detected. If the presence of a person is detected again during the run-on time the run-on time is restarted from zero. If no presence is detected during the run-on time the fade time is started as soon as the run-on time expires.
- **③Fade time(32s):** the time during which the luminous intensity is faded from the presence value to the absence value.
- **④Switch-off delay（level=10%.Non-configurable):** the time during which the absence value is held before the lighting is switched off. Depending on the profile selected the switch-off delay may have different values or may not be defined.
- **⑤Absence value(default: 10 %):** the luminous intensity when there is no person present.
- **⑥Presence value (default: 100 %):** the luminous intensity when persons are present.

◆ Operating window

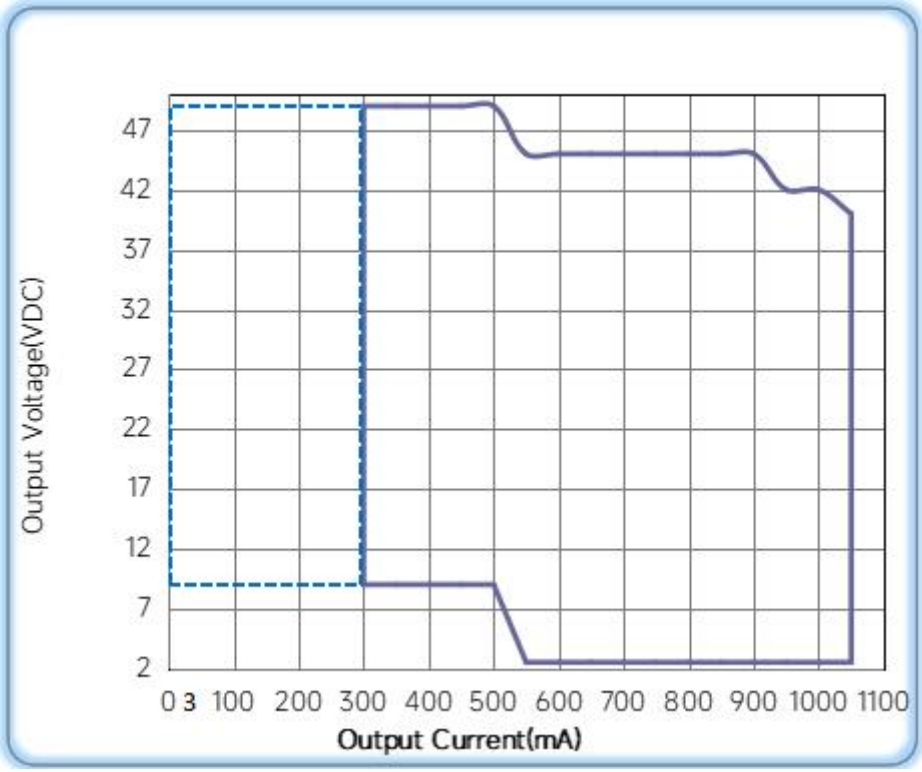

Operating Window 100% Minimum dimming current

◆ Revision Updates

ITEM	BEFORE	AFTER	VERSION	DATE
Initial			A	2023/05/23
Specification		Updated	B	2023/06/27
Life time	> 50000h,@Tc=85℃	> 50000h,@Tc=80℃	C	2023/09/06
Wiring diagram		Update	D	2025/11/28

Remark:The final interpretation of the contents of the specification belongs to Eaglerise Electric & Electronic (China) Co., Ltd.