60W DALI + PUSH Dimming power supply

Features

- For luminaries of protection Class I or II, SELV, Built-in/Independent (With side caps)
- Input Voltage: 220-240VAC、176-280VDC
- Protections: SCP/OLP/OVP/OTP
- Power Factor: > 0.95
- Efficiency: 90%@900mA,full Load,230Vac
- Support DALI-2,Push Dimming
- Suitable for emergency lighting acc. to EN 50172
- EOFi=100%
- 25mm height
- DALI maintainace(Part 251,252,253)
- 5 years warranty

Applications

- LED panel、LED down light
  LED spot light

■Approve

CE CB EL DALI 2 SELV

◆ Description

FLS-60-1500 DALI-2 LD PRO is a 60W constant current LED driver with 900 to 1500mA output current and a forward voltage range from 9 to 49Vdc. The output current is adjustable by DIP Switch. With it's dimensions from 113 x 43 x 25mm. It is easy to integrate in LED Panel and down light products. To ensure trouble-free operation, protection is provided against output short circuit and over Load.

◆ Model code

FLS-60-1500 DALI-2 LD PRO

- Flicker-free
- Dimming type
- Current
- Power
- Series

Stock code : 002922

Article information 2025/ 09/05 REV: B DZ-YF3-02-09A

◆ Specification

Output	Constant Current (mA)	900-1200mA	1250mA	...	1450mA	1500mA
	Voltage Range(VDC)	9-49VDC	9-48VDC	...	9-41.4VDC	9-40VDC
	Unload voltage Max.(VDC)	60VDC				
	Current Accuracy	±5%				
	[2]Output current ripple(≤120Hz)	±3%				
	SVM	≤0.4@Full Load				
	P_{st}	≤1@Full Load				
	Efficiency(Typ.)	90%@900mA,full Load,230Vac				
	EOFI	100%				
Input	Rated input voltage	220-240V				
	Range of input voltage(VAC)	198-264VAC				
	Maximum voltage	300VAC@1 h maximum,unit might not operate in this abnormal condition				
	Range of input voltage(VDC)	176-280VDC				
	Frequency(Hz)	0/50/60 Hz				
	Displacement Factor	≥0.9@full load, 230Vac				
	Power Factor	>0.95@full load，230Vac				
	Input Current max	AC:0.35A max DC:0.39A max				
	Start-up time	＜0.8S				
	Switch over time(AC/DC mode)	＜0.5S				
	Standby Power	≤0.3W, @220Vac				
	Network Standby Power	≤0.3W,@220Vac				
	THD (Typ.)	＜10%@full load,230Vac				
Dimming	Dimming	YES				
	Dimming mode	DALI-2（IEC 62386-101,102,207,251,252,253） &Push Dimming (Corridor Function)				
	Dimming depth	1%@mA				
	Dimming current range	1~100%				
	Dimming method	1%-12.5% @PWM dimming，12.5%-100% @AM dimming				
Protection	Over Load Protection	103-120%				
		YES/Latch off				
	Over Voltage Protection	60VDC				
		YES/Latch off				
	Short circuit Protection	YES/Latch off				
	Over Temperature Protection	YES/Auto Resume				
capability	Surge capability (L-N)	1KV				
	Surge capability (L/N-Ground)	NA				
Environment	Operating Temperature	-20℃~+45℃				
	Humidity	20%-90%RH				

	Tc	90℃
	Storage Temperature	-40℃~+80℃
	Life time	＞50000h,@TC=85℃
	Noise	≤25dB(A)@20cm
Surface	Dimension	113 x 43 x 25 mm (With side caps) : 147 X43X25mm
	material	PC
Standards	Safety	GB19510. 1, GB19510. 14;IEC61347- 1, IEC61347-2- 13;AS/NZS 61347- 1, AS/NZS 61347-2- 13;AS 61347.2.13;EN62384;
	EMC	GB/T17743, GB17625. 1;EN55015, EN61000-3-2, EN61000-3-3, EN61547;EN55015, EN61000-3-2, EN61000-3-3, EN61547,EN 62493;EN61000-4-5;EN61000-4-2,3,4,5,6,8,11, EN61547
	Energy Efficiency	Erp2.0 EU 2019/2020
	RoHS	RoHS (2011/65/EU) (EU)2015/863
DALI performance	EN 62386-101 (DALI-2) EN 62386-102 (DALI-2) EN 62386-207 (DALI-2,including part251,252,253)	
Note	1.All parameters not specially mentioned are measured at 230VAC input , full load and 25℃ of ambient temperature. 2.Ripple & Noise are measured at 20MHz of bandwidth by using a 300mm twisted pair-wire terminated with a 0.1uF & 47 uF parallel capacitor. 3.Hot plug-in or secondary switching of LEDs is not permitted and may causea very high current to the LEDs. 4.DALI protocol comprises 16 groups and 64 addresses.Up to 32 drivers can perform the PUSH dimming at the same time when utilizing one push button. 5.The DC input for this product is only used for emergency lighting and applies to functional and safety requirements, EMC is not considered. 6.EL compatible with IEC 61347-2-13 Annex J, compatible with EN 60598-2-22 emergency lighting fixtures, compatible with EN 50172 central battery system applications. 7.All Eaglerise power supply are complied with EMI regulations. Since they are belong to component and will be installed inside system enclosure. When they are integrated into a system, the EMI characteristics of the system must be re-verified again.	

◆ Parameter

Number	Output				Switch position			
	Current (mA)	Voltage (VDC)	Voltage No load (VDC)	Power (W)	1	2	3	4
1	900mA	9-49VDC	60VDC	44.1W	--	--	--	--
2	900mA			44.1W	ON	--	--	--
3	900mA			44.1W	--	ON	--	--
4	900mA			44.1W	ON	ON	--	--
5	950mA			46.6W	--	--	ON	--
6	1000mA			49W	ON	--	ON	--
7	1050mA			51.5W	--	ON	ON	--
8	1100mA			53.9W	ON	ON	ON	--

9	1150mA			56.4W	--	--	--	ON
10	1200mA			58.8W	ON	--	--	ON
11	1250mA	9-48VDC		60W	--	ON	--	ON
12	1300mA	9-46.2VDC		60W	ON	ON	--	ON
13	1350mA	9-44.4VDC		60W	--	--	ON	ON
14	1400mA	9-42.9VDC		60W	ON	--	ON	ON
15	1450mA	9-41.4VDC		60W	--	ON	ON	ON
*16	1500mA	9-40VDC		60W	ON	ON	ON	ON

* Factory default

◆ Inrush Current

I_{peak}	T_{width}	B10	B16	B20	C10	C16	C20
10.8A	**33.6μs**	22pcs	36pcs	45pcs	22pcs	36pcs	45pcs

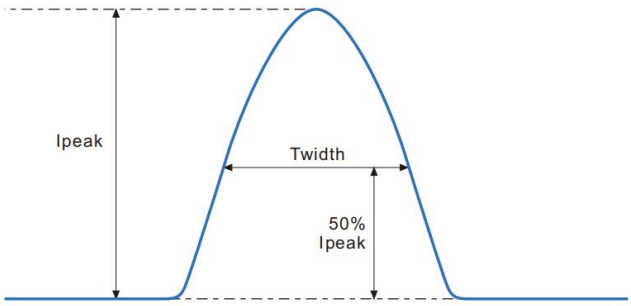

Remarks:

1.The number of drives mounted under different MCBs in the table is the maximum value. Please do not exceed this number during installation.

2.Different brands and models of miniature circuit breakers, the number of drives mounted will be slightly different.

◆ Wiring diagram

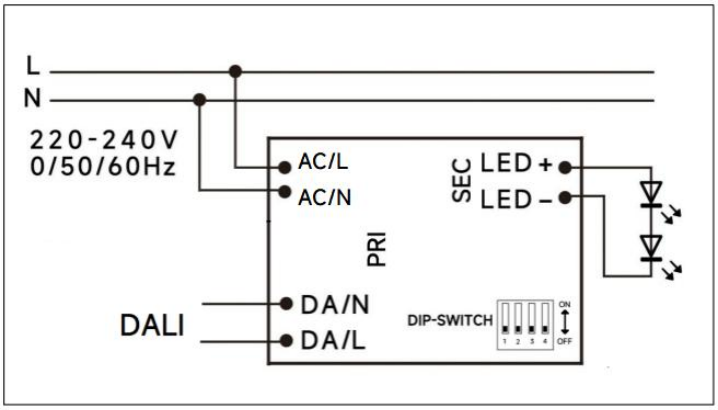

DALI dimming application

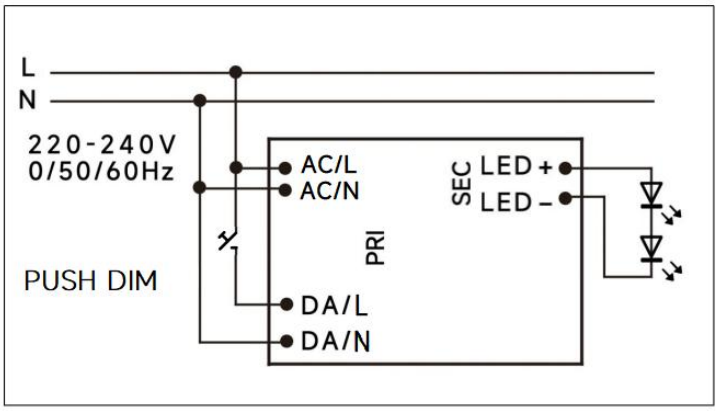

PushDIM dimming application

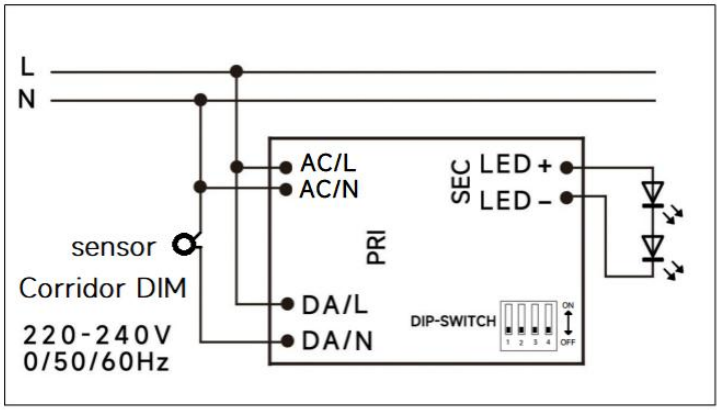

Corridor DIM dimming application

◆ 2D diagram

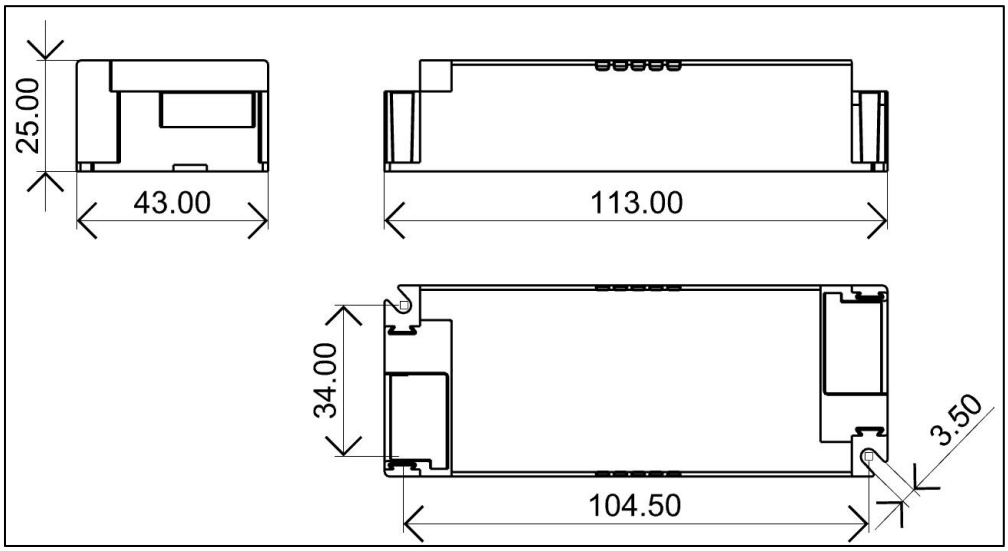

With side caps

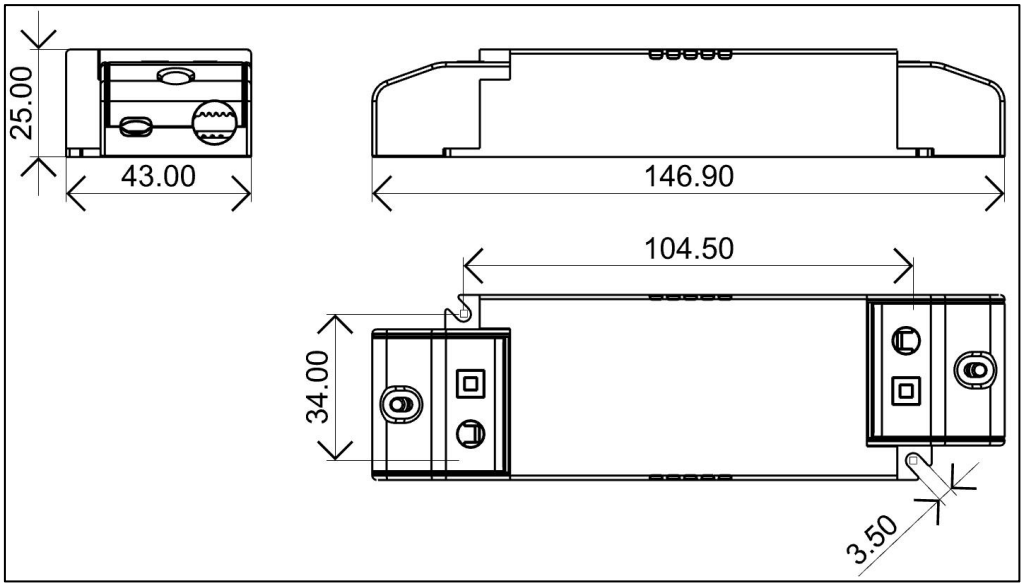

Terminal

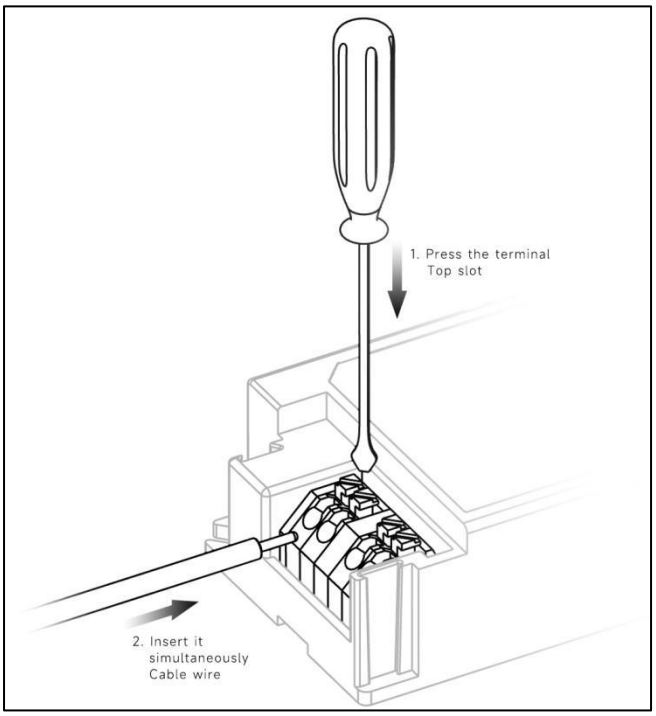
1. Press the terminal
Top slot
2. Insert it
simultaneously
Cable wire

◆ Wiring & Connections

Specification item		Value （Unit ）
Input	Input wire cross-section	0.5...1.5 mm^2 （With side caps：0.75...1.5 mm^2）
	Input wire gauge.	16...20 AWG （With side caps：16...22 AWG ）
	Input wire strip length	7...9mm
Output	Output wire cross-section	0.5...1.5 mm^2
	Output wire gauge.	16...20 AWG
	Output wire strip length	7...9mm

◆ Recommended wire

Small side cap of small hole	Wire type
0.5mm^2	H03VVH2-F 2 core&3 core H03VV-F 2 core&3 core
0.75mm^2	H03VVH2-F 2 core&3 core H03VV-F 2 core&3 core H05VV-F 2 core
1.0mm^2	H05VVH2-F 2 core
1.5mm^2	CCC 08(RV-90)

Small side cap of big hole	Wire type
0.75mm^2	H05VV-F 2 core&3 core&4 core
1.0mm^2	H05VV-F 2 core&3core
1.5mm^2	H05VV-F 2 core&3core

Big side cap	Wire type
0.5mm^2	H03VVH2-F 2 core&3 core H03VV-F 2 core&3 core
0.75mm^2	H03VVH2-F 2 core&3 core H03VV-F 2 core&3 core H05VV-F 2 core&3 core&4 core
1.0mm^2	H05VVH2-F 2 core&3 core
1.5mm^2	CCC 08(RV-90) H05VV-F 2 core&3core

Note:Solid wire is risky to use on an angled terminal.Stranded wire is recommended for this kind of use.

◆ Curve for FLS-60-1500 DALI-2 LD PRO, Io=1500mA

Lifetime vs. Temperature Curve

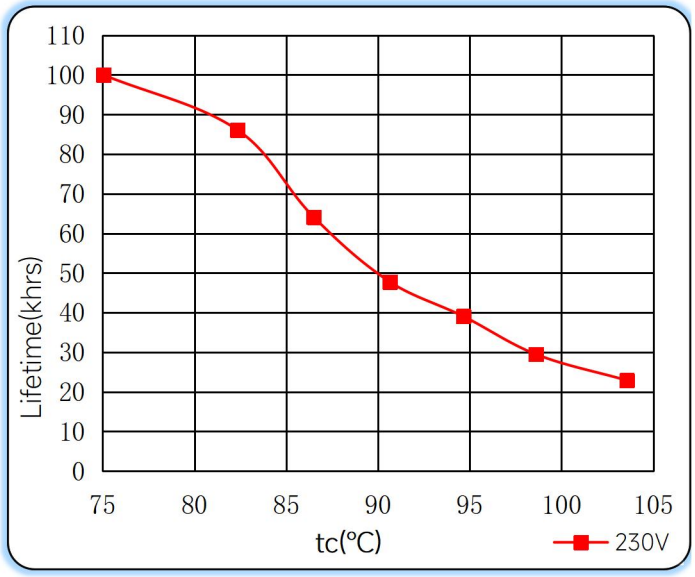

Efficiency vs. Load

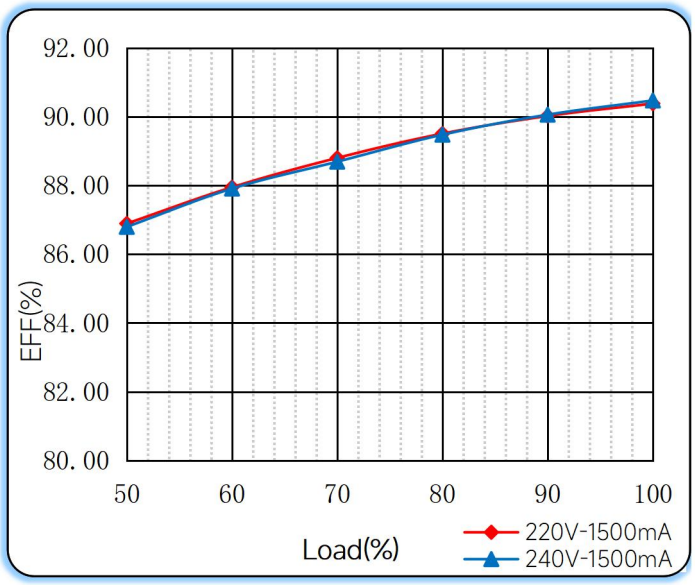

Power Factor Characteristics

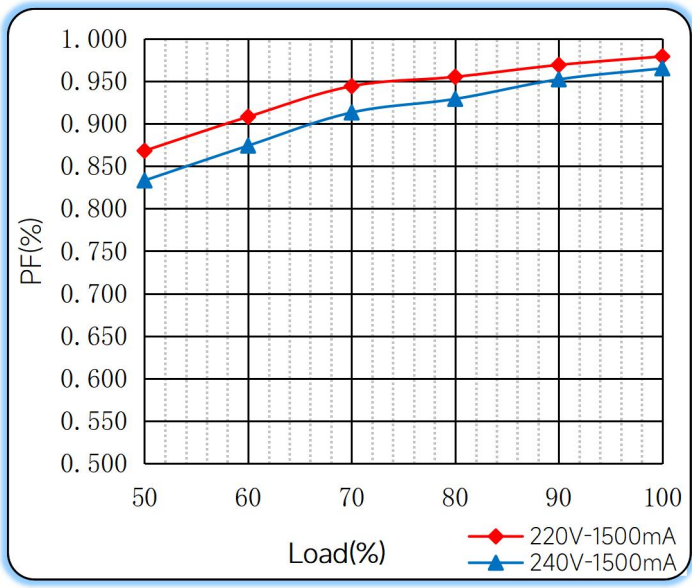

THD vs. Load

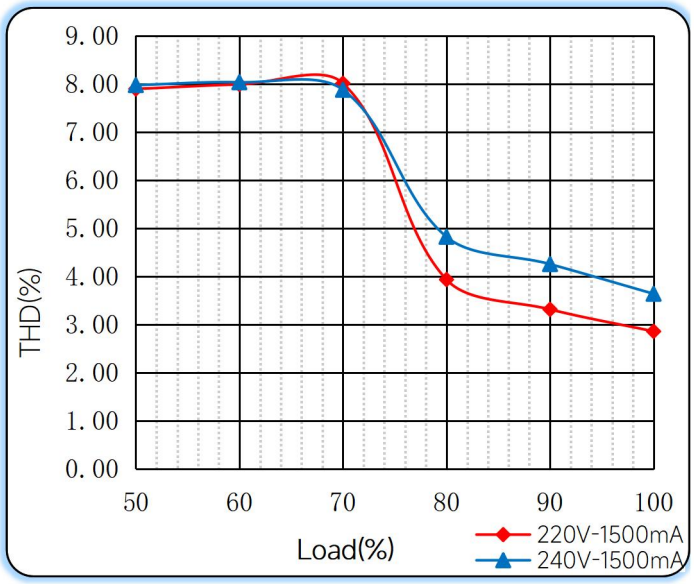

◆ Push dimming operation

Action	Action duration	Function
Short push	<0.5s	Turn on/off
Short push twice	<0.5s	LED on: Save current brightness level LED off: Delete saved level and turn on at 100% brightness
Short push five times	<3s	Quit Corridor mode
Long push	0.5-14s	Dimming up or down
Long push	15s-2mins	Sync all LEDs to be 100% brightness
Long push	>2mins	Enter Corridor mode - LED keep 100% brightness for 2mins. Then brightness will turn to be 10% within 32s if no action during 2mins 100% brightness.

Note:

1.The factory default brightness is at 100%.

2.Up to 30 drivers can perform the PUSH dimming at the same time when utilizing one common push button

3.The maximum length of the cable from the push button to the last driver is 200 meters.

◆ Corridor mode

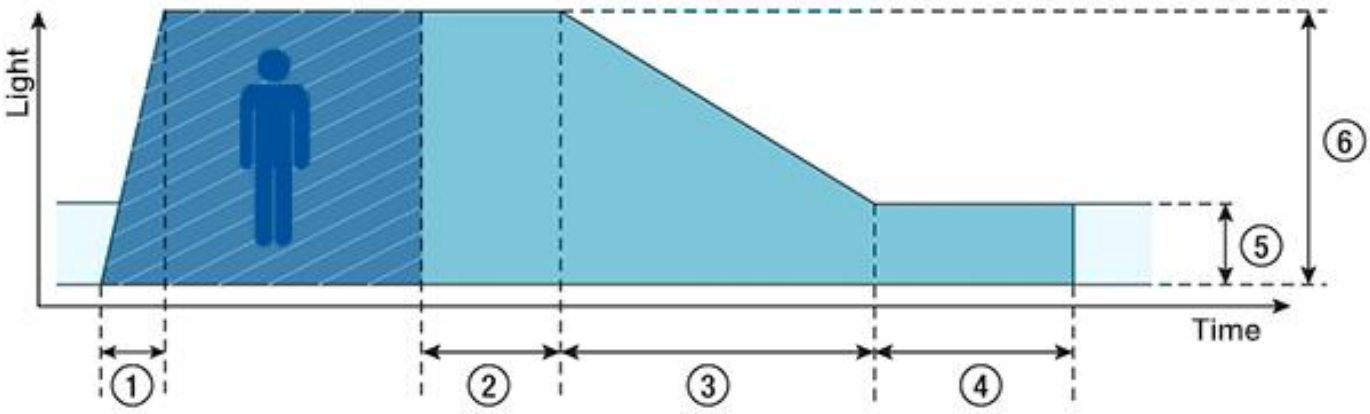

- **①Fade-in time(0.5s):** the time that starts as soon as the presence of a person is detected. During the fade-in time the luminous intensity is faded up to the presence value.
- **②Run-on time(120s):** the time that starts as soon as the presence of a person is no longer detected. If the presence of a person is detected again during the run-on time the run-on time is restarted from zero. If no presence is detected during the run-on time the fade time is started as soon as the run-on time expires.
- **③Fade time(32s):** the time during which the luminous intensity is faded from the presence value to the absence value.
- **④Switch-off delay（Never Off):** the time during which the absence value is held before the lighting is switched off. Depending on the profile selected the switch-off delay may have different values or may not be defined.
- **⑤Absence value(default: 10 %):** the luminous intensity when there is no person present.
- **⑥Presence value (default: 100 %):** the luminous intensity when persons are present.

◆ Operating window

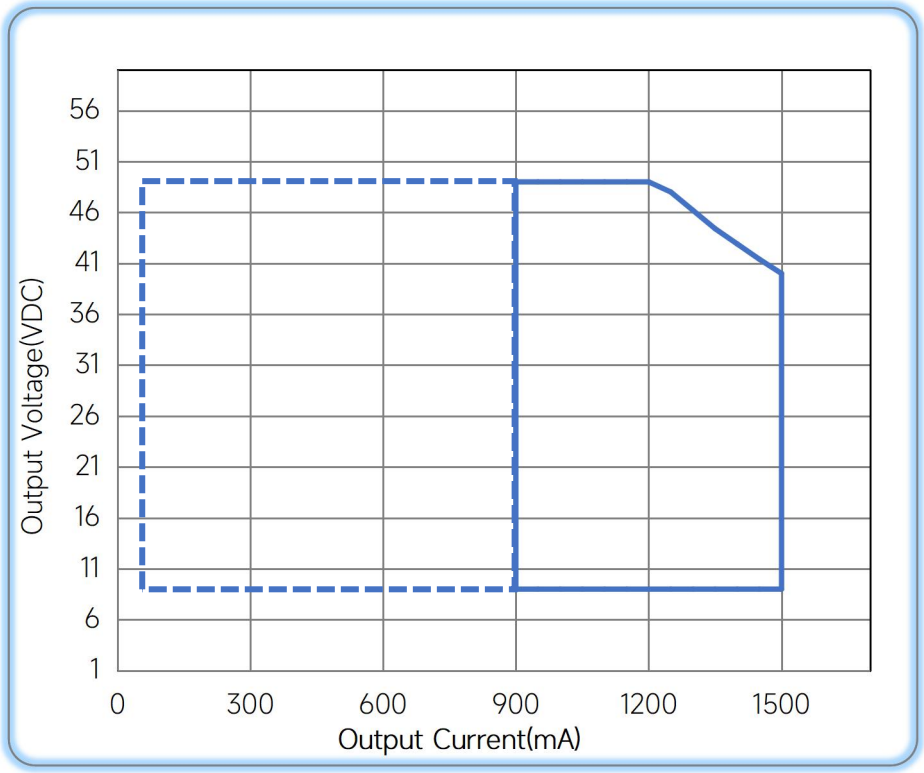

Operating Window 100% Minimum dimming current

◆ Revision Updates

ITEM	BEFORE	AFTER	VERSION	DATE
Initial			A	2024/02/22
Deleted RCM			B	2025/09/05

Remark:The final interpretation of the contents of the specification belongs to Eaglerise Electric & Electronic (China) Co., Ltd.