8W 0-10V+RX+PWM Dimming power supply

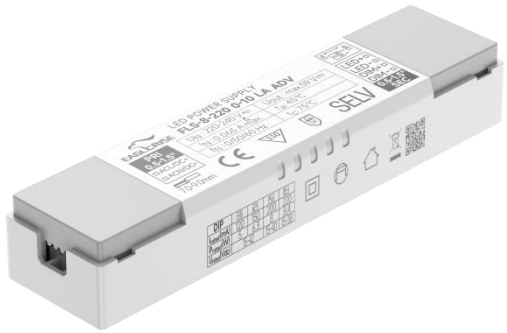

■**Approve**

Features

- For luminaries of protection Class II, SELV, independent
- Input Voltage 220-240VAC
- Protections: SCP/OLP/OVP/OTP
- Power Factor ： 0.95
- Efficiency ： 83%
- Support 0-10V,RX,PWM Dimming
- 5 years warranty
- IP20

Applications

- LED panel、Spot light、Down light

◆ Description

FLS-8-220 0-10 LA ADV is an 8W constant current LED driver with 120 to 220mA output current and a forward voltage range from 15 to 42Vdc. The output current is adjustable by DIP Switch. With it's dimensions from 115 x 30 x 20.5 mm it is easy to integrate in LED panel, spot and down light products. To ensure trouble-free operation, protection is provided against output short circuit and over Load.

◆ Model code

FLS-8-220 0-10 LA ADV

- Flicker-free
- Dimming type
- Current
- Power
- Series

◆ Specification

Output	Constant Current (mA)	120	150	200	220
	Voltage Range (VDC)	15-42	15-42	15-40	15-38
	Unload voltage Max.	59VDC			
	Current Accuracy	±7%	-8%~+5%		±5%
	Output LF current ripple(≤120Hz)	±5%			
	SVM	≤0.4			
	P_{st}	≤1			
	Efficiency(Typ.)	83%@200mA,Full Load,230VAC			
	EOFI	100%			
Input	Rated input voltage	220-240V			
	Range of input voltage	198-264VAC			
	Maximum voltage	300VAC@1 h maximum,unit might not operate in this abnormal condition			
	Range input voltage(DC)	176-280VDC			
	Frequency(Hz)	0/50/60 Hz			
	Displacement factor	≥0.5			
	Power Factor	0.95@Full load,230VAC			
	Input Current	0.065A			
	Start-up time	< 0.5S			
	No Load Power	≤0.5W			
	Standby Power	≤0.5W			
	Network standby power	≤0.5W			
	THD (Typ.)	<10%@Full Load,230VAC			
Dimming	Dimming	YES			
	Dimming mode	0-10V,RX,PWM			
	Dimming depth	1%			
	Dimming current range	1-100%			
Protection	Over Load Protection	103-120%			
		YES/auto Resume			
	Over Voltage Protection	> 59VDC			
		YES/auto Resume			
	Short circuit Protection	YES/auto Resume			
capability	Surge capability (L-N)	1KV			
	Surge capability (L/N-Ground)	NA			
Environment	Operating Temperature	-20℃~+45℃			
	Humidity	20%-90%RH			
	Tc	75℃			
	Storage Temperature	-25℃~+60℃			
	Lifetime	>50000h,@Tc=70℃			

	Noise	≤25dB(A)@20cm
Surface	Dimension	115 x 30 x 20.5 (LXWXH)mm
	material	PC
Standards	Safety	GB19510. 1, GB19510. 14;IEC61347- 1, IEC61347-2- 13;AS/NZS 61347- 1, AS/NZS 61347-2- 13;AS 61347.2.13;EN62384;
	EMC	GB/T17743, GB17625. 1;EN55015, EN61000-3-2, EN61000-3-3, EN61547;EN55015, EN61000-3-2, EN61000-3-3, EN61547,EN
	ErP	Erp2.0 EU 2019/2020
	RoHS	RoHS (2011/65/EU) (EU)2015/863
Note	1.All parameters NOT specially mentioned are measured at 230VAC input , full load and 25℃ of ambient temperature. 2.Ripple & Noise are measured at 20MHz of bandwidth by using a 300mm twisted pair-wire terminated with a 0.1uF & 47 uF parallel capacitor. 3.EL compatible with IEC 61347-2-13 Annex J, compatible with EN 60598-2-22 emergency lighting fixtures, compatible with EN 50172 central battery system applications. 4.The DC input for this product is only used for emergency lighting and applies to functional and safety requirements, EMC is not considered. 5.The over-temperature protection of the product is provided by the IC. 6.All Eaglerise power supply are complied with EMI regulations. Since they are belong to component and will be installed inside system enclosure. When they are integrated into a system, the EMI characteristics of the system must be re-verified again.	

◆ Parameter

Number	Output				Switch position	
	Current (mA)	Voltage (VDC)	Voltage No load (VDC)	Power (W)	1	2
1	120mA	15-42	59VDC	5	--	--
2	150mA			6.3	ON	--
3	200mA	15-40		8	--	ON
4	220mA	15-38		8.4	ON	ON

* Factory default

◆ Inrush Current

I_{peak}	Twidth	B10	B16	B20	C10	C16	C20
2.28A	**29.6μs**	123pcs	196pcs	246pcs	123pcs	196pcs	246pcs

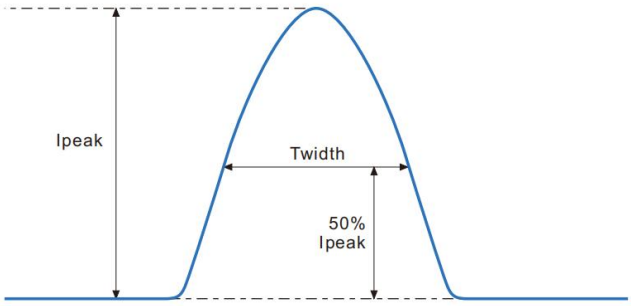

Remarks:

1.The number of drives mounted under different MCBs in the table is the maximum value. Please do not exceed this number during installation.

2.Different brands and models of miniature circuit breakers, the number of drives mounted will be slightly different.

◆ Wiring diagram

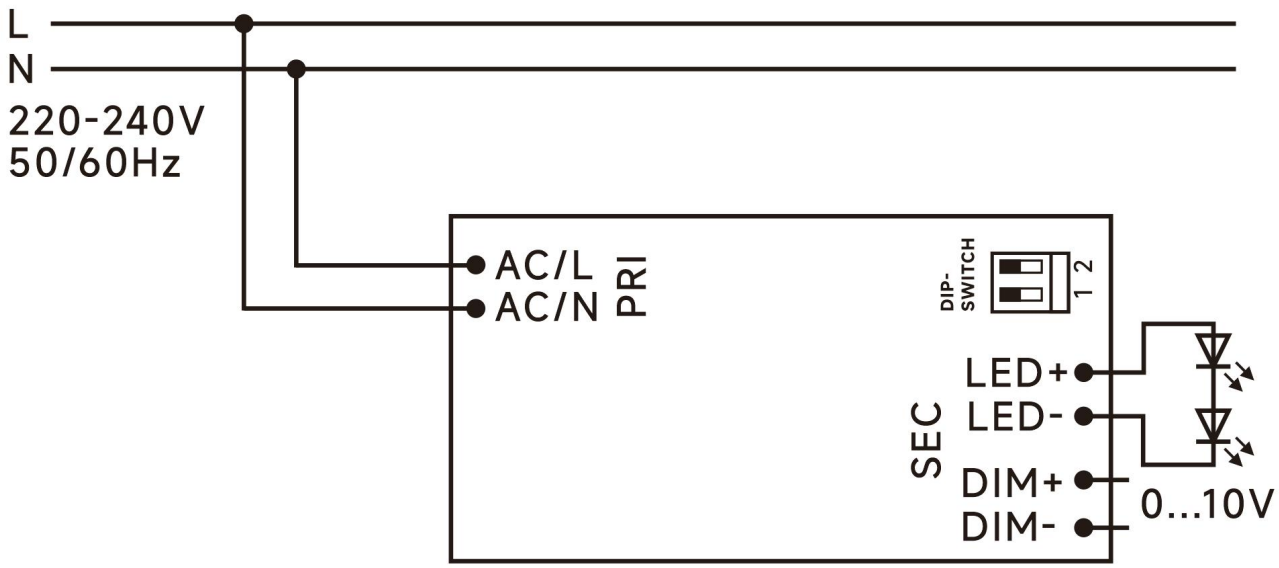

◆ 2D diagram

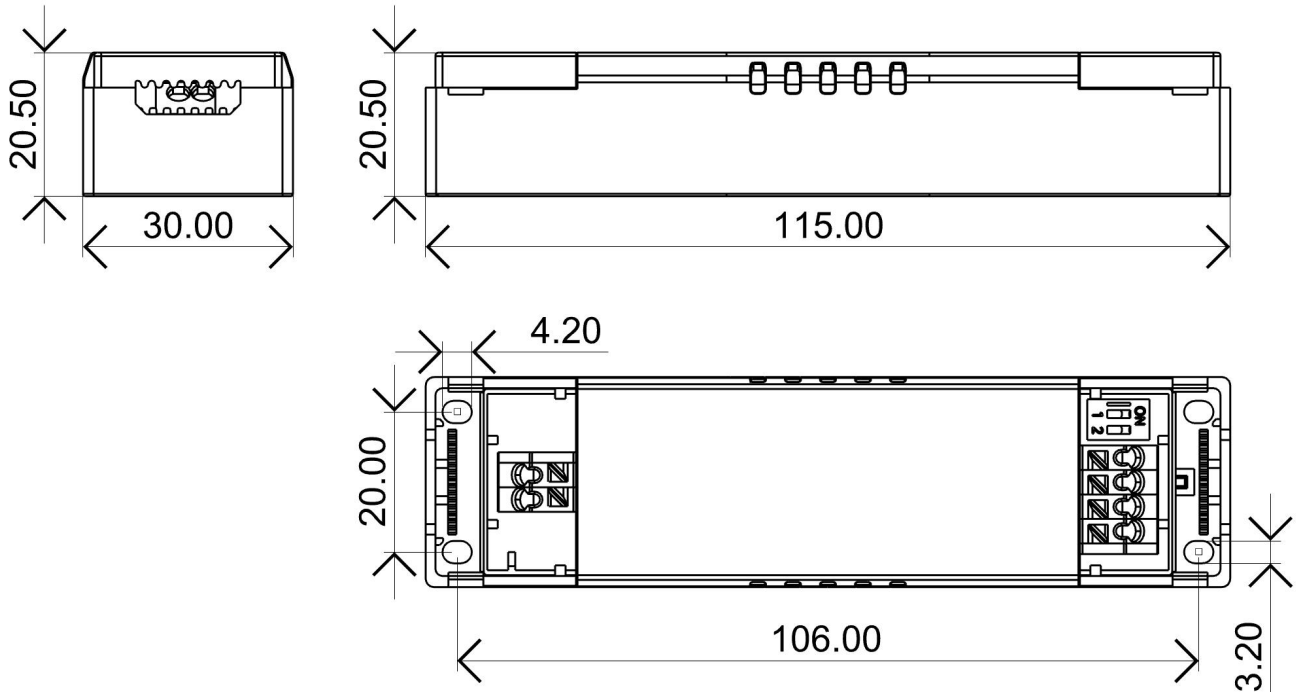

Terminal

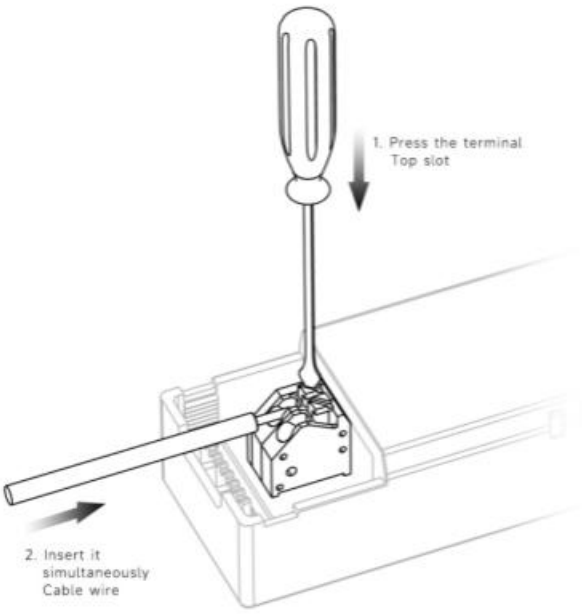

◆ Wiring & Connections

Specification item		Value （Unit ）
Input	Input wire cross-section	0.5...1.5 mm2
	Input wire gauge.	16...20 AWG
	Input wire strip length	8...9mm
Output	Output wire cross-section	0.5...1.5 mm2
	Output wire gauge.	16...20 AWG
	Output wire strip length	8...9mm

◆ Recommended wire

Wire cross-section	Wire type
2*0.5mm^2	H03VVH2-F 2core
2*0.75mm^2	H03VVH2-F 2core
1.5mm^2	CCC 08(RV-90)
16AWG(1.25mm^2)	UL1015

Note:Solid wire is risky to use on an angled terminal.Stranded wire is recommended for this kind of use.

◆ Packaging

Model	Product Dimensions(mm)	weight/piece	Outer carton dimension(mm)	Quantity/carton	Net weight/carton(Kg)	Gross weight/carton(Kg)
FLS-8-220 0-10 LA ADV	115X30X20.5mm	0.05	370X275X215mm	203	10.15	11.17

◆ Curve for FLS-8-220 0-10 LA ADV, Io=220mA

Lifetime vs. Temperature Curve

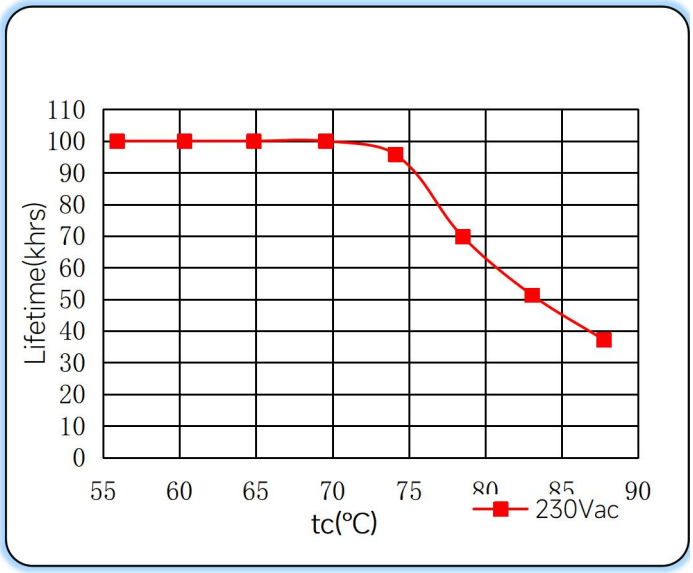

Efficiency vs. Load

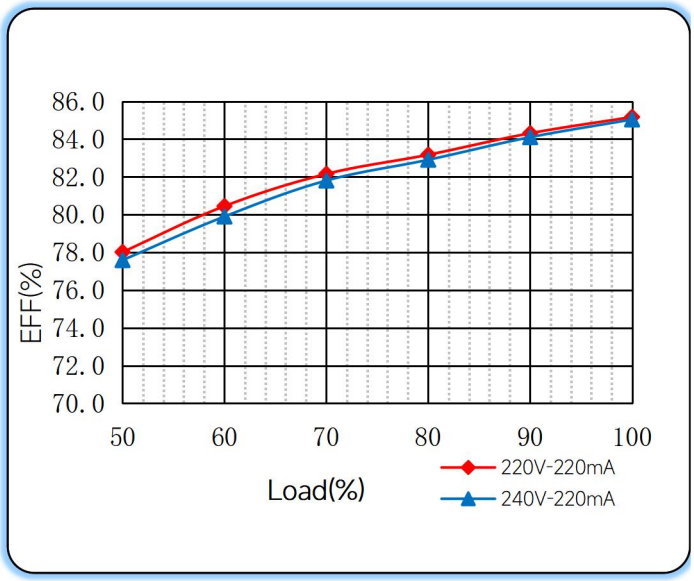

Power Factor Characteristics

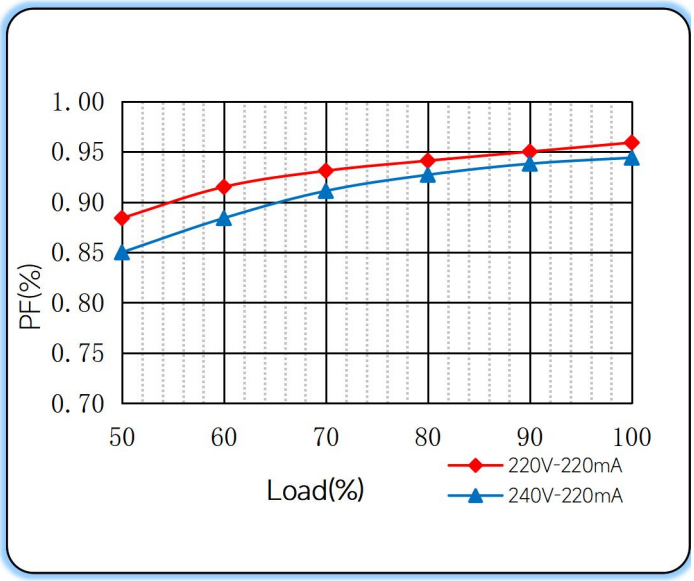

THD vs. Load

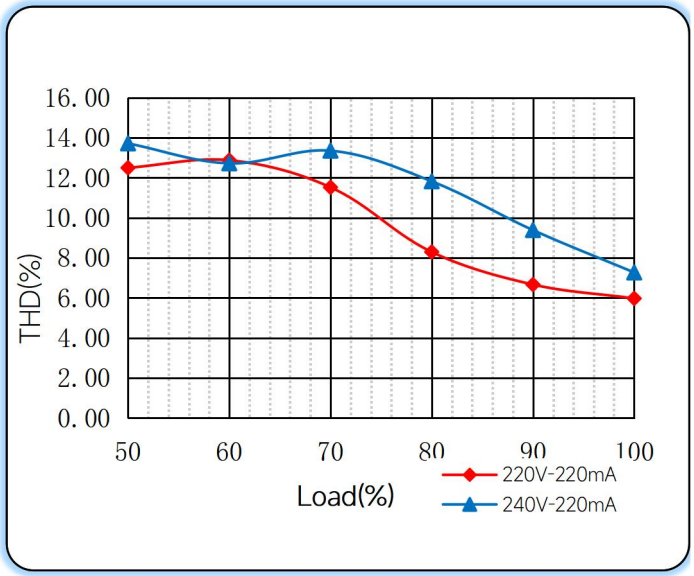

Dimming Curve

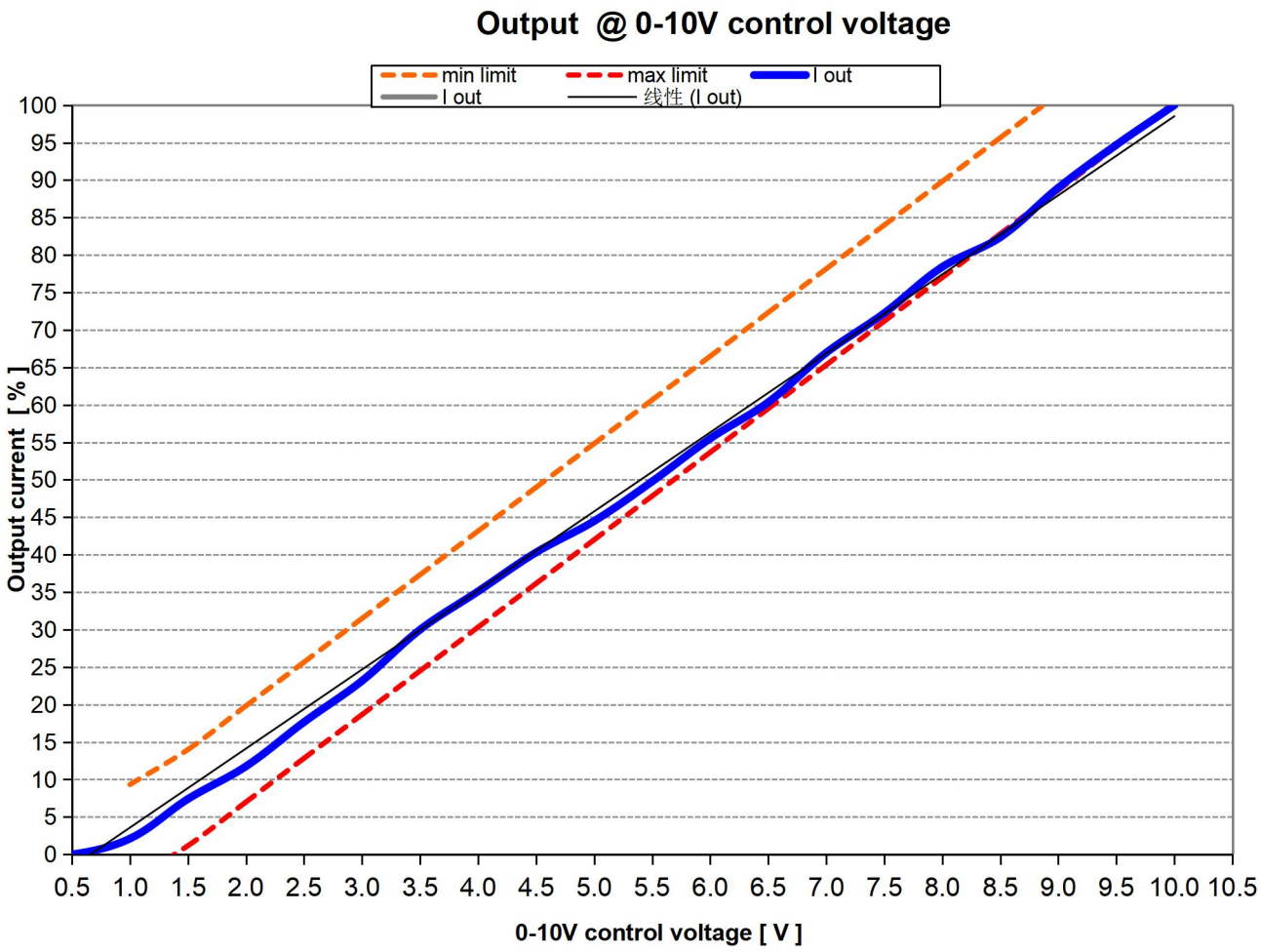

◆ Operating window

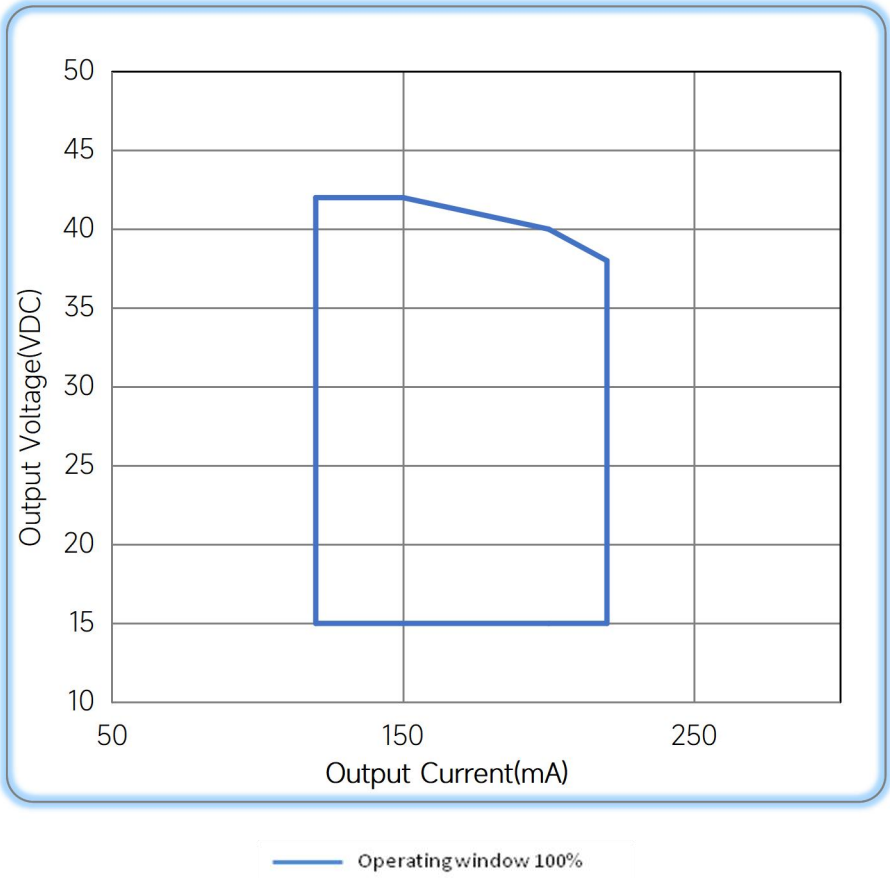

◆ Revision Updates

ITEM	BEFORE	AFTER	VERSION	DATE
Initial			A	2024/02/23
Current Accuracy	±5%@120mA	±7%@120mA	B	2025/04/25
Current Accuracy		update	C	2025/05/27

Remark:The final interpretation of the contents of the specification belongs to Eaglerise Electric & Electronic (China) Co., Ltd.