8W DALI + PUSH Dimming power supply

Features

- For luminaries of protection Class II, SELV, independent
- Input Voltage 220-240VAC
- Protections: SCP/OLP/OVP/OTP
- Power Factor ： 0.95
- Efficiency ： 83%
- Support DALI-2,Push Dimming
- 5 years warranty
- IP20

Applications

- LED panel、Spot light、Down light

■Approve

CE 05 CB SELV

EL DALI 2

◆ Description

FLS-8-350 DALI-2 LD EXC is an 8W constant current LED driver with 80 to 350mA output current and a forward voltage range from 9 to 42Vdc. The output current is adjustable by DIP Switch. With it's dimensions from 126 x 30 x 20.5 mm it is easy to integrate in LED panel, spot and down light products. To ensure trouble-free operation, protection is provided against output short circuit and over Load.

◆ Model code

FLS-8-350 DALI-2 LD EXC

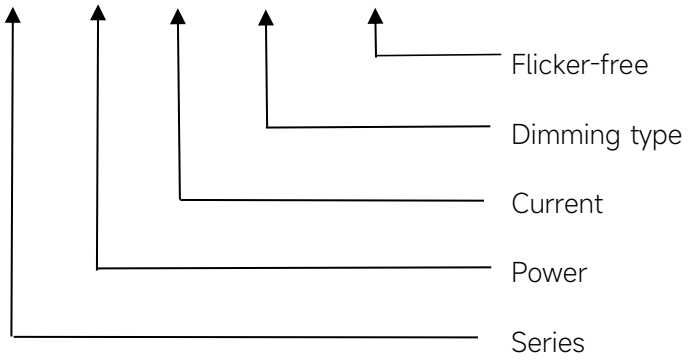

◆ Specification

Output	Constant Current （mA）	80	100	150	180	200	250	300	350
	Voltage Range（VDC）	9-42				9-40	9-32	9-27	9-24
	Unload voltage Max.	59VDC							
	Current Accuracy	±7%		±5%					
	Output LF current ripple(≤120Hz)	±5%							
	SVM	≤0.4							
	P_{st}	≤1							
	Efficiency(Typ.)	83%@200mA,Full load,230VAC							
	EOFI	85%							
Input	Rated input voltage	220-240V							
	Range of input voltage	198-264VAC							
	Maximum voltage	300VAC@1 h maximum,unit might not operate in this abnormal condition							
	Range input voltage(DC)	176-280VDC							
	Frequency(Hz)	0/50/60 Hz							
	Displacement factor	≥0.5							
	Power Factor	0.95@Full load,230VAC							
	Input Current	0.065A							
	Start-up time	＜0.8S							
	No Load Power	≤0.5W							
	Standby Power	≤0.5W							
	Network standby power	≤0.5W							
	THD (Typ.)	<10%@Full load							
Dimming	Dimming	YES							
	Dimming mode	DALI-2（IEC 62386-101,102,207,251,252,253） &Push Dimming (Corridor Function)							
	Dimming depth	3.5mA@≤300mA;1%@350mA							
	Dimming current range	1 ~100%							
Protection	Over Load Protection	103-120%							
		YES/Auto Resume							
	Over Voltage Protection	＞59VDC							
		YES/Auto Resume							
	Short circuit Protection	YES/Auto Resume							
	Over Temperature Protection	YES/Auto Resume							
capability	Surge capability (L-N)	1KV							
	Surge capability (L/N-Ground)	NA							
Environment	Operating Temperature	-20℃~+45℃							
	Humidity	20%-90%RH							
	Tc	75℃							

	Storage Temperature	-25℃~+60℃
	Lifetime	>50000h,@Tc=70℃
	Noise	≤25dB(A)@20cm
Surface	Dimension	126 x 30 x 20.5 (LXWXH)mm
	material	PC
Standards	Safety	GB19510. 1, GB19510. 14;IEC61347- 1, IEC61347-2- 13;AS/NZS 61347- 1, AS/NZS 61347-2- 13;AS 61347.2.13;EN62384;
	EMC	GB/T17743, GB17625. 1;EN55015, EN61000-3-2, EN61000-3-3, EN61547;EN55015, EN61000-3-2, EN61000-3-3, EN61547,EN
	ErP	Erp2.0 EU 2019/2020
	RoHS	RoHS (2011/65/EU) (EU)2015/863
Note	1.All parameters NOT specially mentioned are measured at 230VAC input , full load and 25℃ of ambient temperature. 2.Ripple & Noise are measured at 20MHz of bandwidth by using a 300mm twisted pair-wire terminated with a 0.1uF & 47 uF parallel capacitor. 3.DALI protocol comprises 16 groups and 64 addresses.Up to 32 drivers can perform the PUSH dimming at the same time when utilizing one push button. 4.EL compatible with IEC 61347-2-13 Annex J, compatible with EN 60598-2-22 emergency lighting fixtures, compatible with EN 50172 central battery system applications. 5.The DC input for this product is only used for emergency lighting and applies to functional and safety requirements, EMC is not considered. 6.All Eaglerise power supply are complied with EMI regulations. Since they are belong to component and will be installed inside system enclosure. When they are integrated into a system, the EMI characteristics of the system must be re-verified again.	

◆ Parameter

Number	Output				Switch position		
	Current (mA)	Voltage (VDC)	Voltage No load (VDC)	Power (W)	1	2	3
1	80mA	9-42	59VDC	3.36	--	--	--
2	100mA			4.2	ON	--	--
3	150mA			6.3	--	ON	--
4	180mA			7.56	ON	ON	--
5	200mA	9-40		8	--	--	ON
6	250mA	9-32		8	ON	--	ON
7	300mA	9-27		8.1	--	ON	ON
*8	350mA	9-24		8.4	ON	ON	ON

* Factory default

◆ Inrush Current

I^{peak}	Twidth	B10	B16	B20	C10	C16	C20
2.04A	**45.6μs**	123pcs	196pcs	246pcs	123pcs	196pcs	246pcs

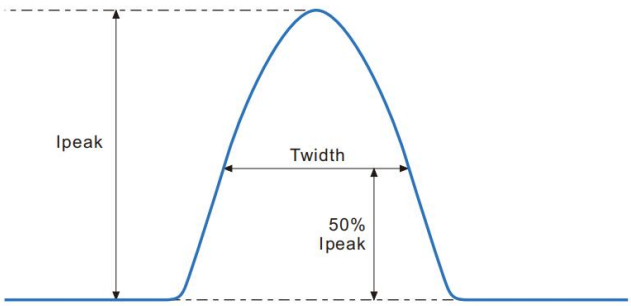

Remarks:

1.The number of drives mounted under different MCBs in the table is the maximum value. Please do not exceed this number during installation.

2.Different brands and models of miniature circuit breakers, the number of drives mounted will be slightly different.

◆ Wiring diagram

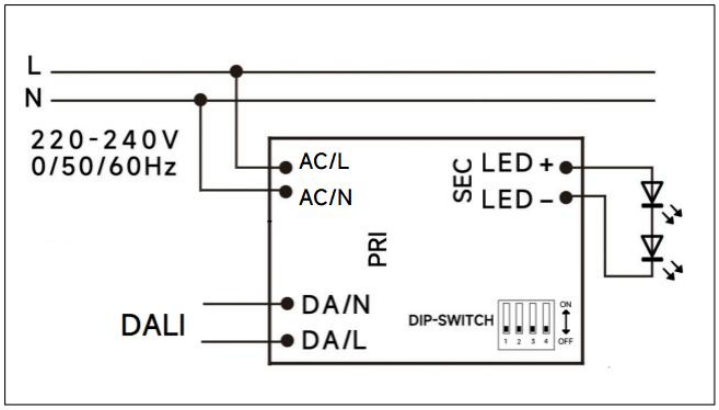

DALI dimming application

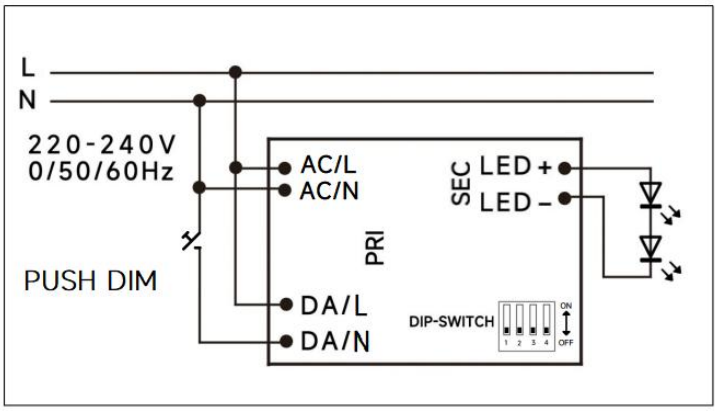

PushDIM dimming application

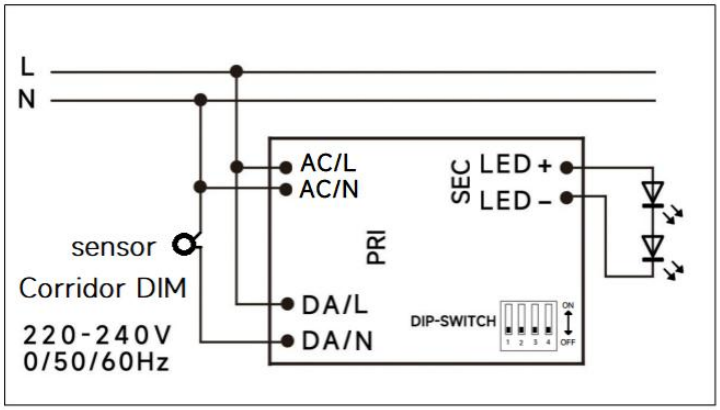

Corridor DIM dimming application

◆ 2D diagram

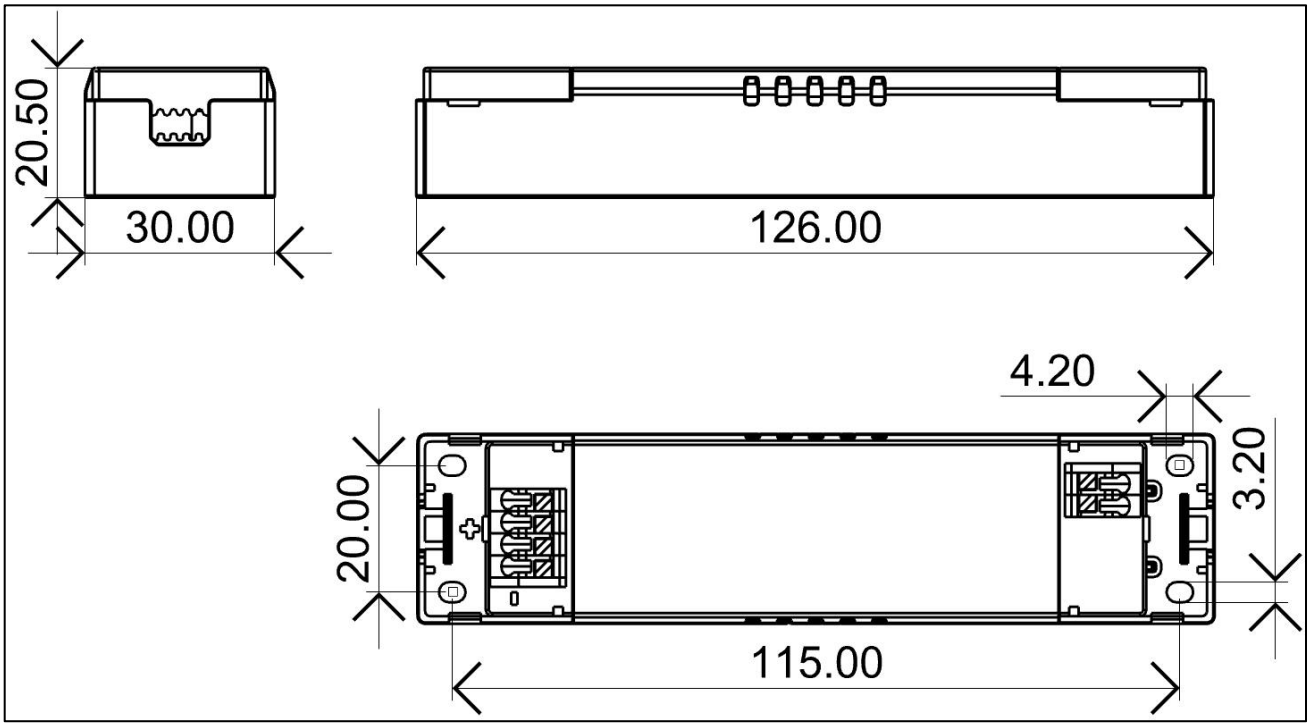

Terminal

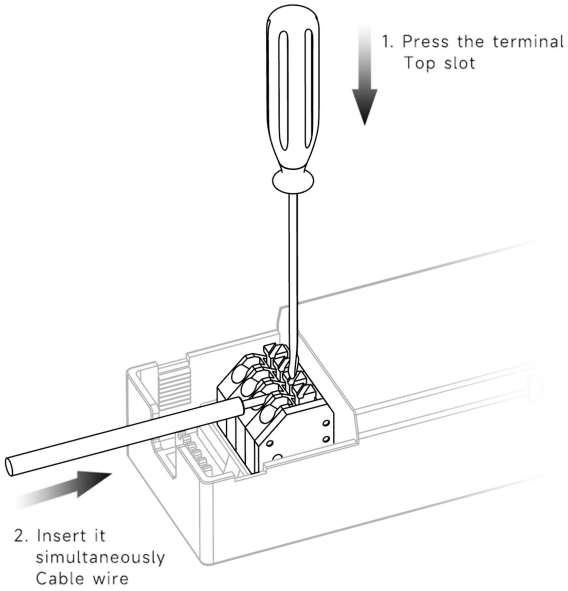

◆ Wiring & Connections

Specification item		Value （Unit ）
Input	Input wire cross-section	0.5...1.5 mm2
	Input wire gauge.	16...20 AWG
	Input wire strip length	8...9mm
Output	Output wire cross-section	0.5...1.5 mm2
	Output wire gauge.	16...20 AWG
	Output wire strip length	8...9mm

Note:Solid wire is risky to use on an angled terminal.Stranded wire is recommended for this kind of use.

◆ Packaging

Model	Product Dimensions(mm)	weight/piece	Outer carton dimension(mm)	Quantity/carton	Net weight/carton(Kg)	Gross weight/carton(Kg)
FLS-8-350 DALI-2 LD EXC	126X30X20.5	0.0575	370X275X215mm	150	8.625	9.246

◆ Curve for FLS-8-350 DALI-2 LD EXC, Io=350mA

Lifetime vs. Temperature Curve

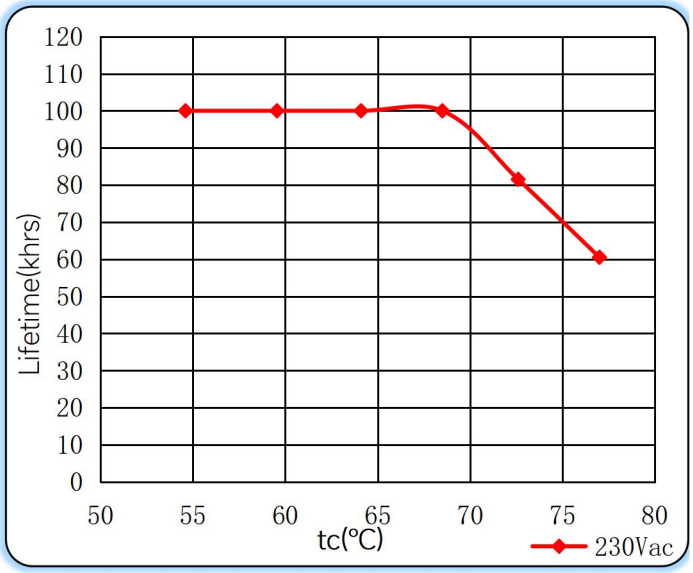

Efficiency vs. Load

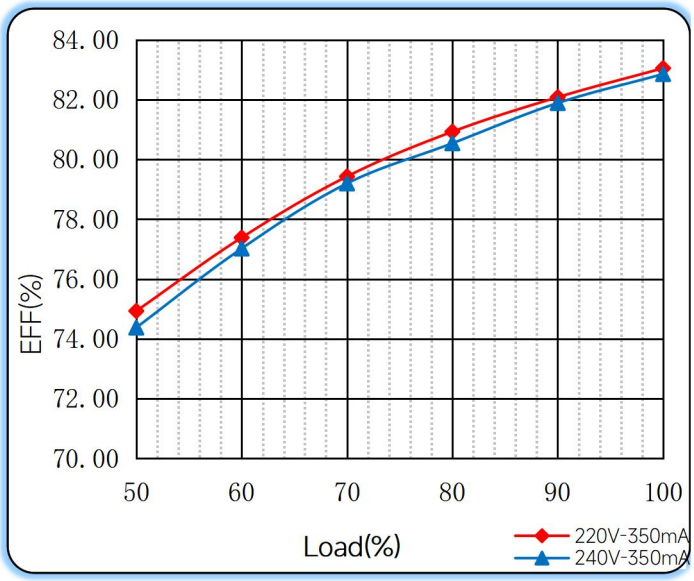

Power Factor Characteristics

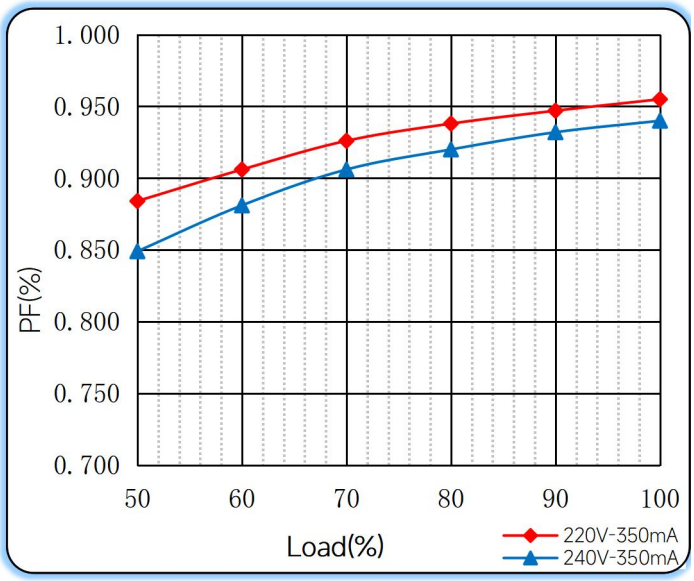

THD vs. Load

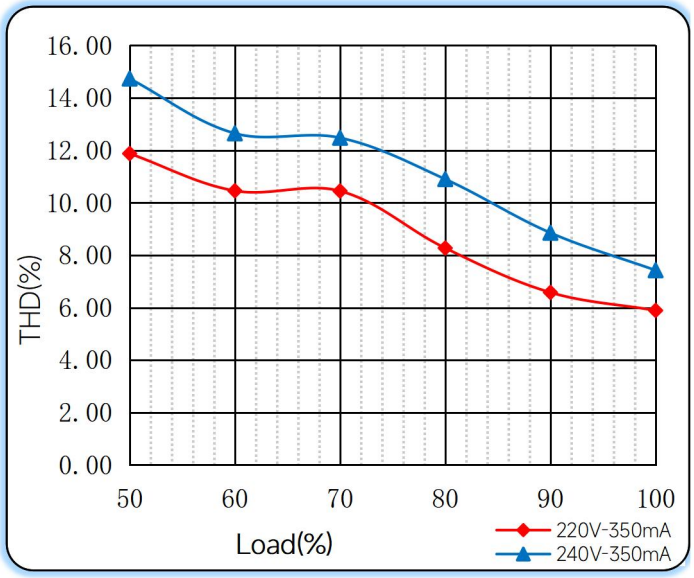

◆ Push dimming operation

Action	Action duration	Function
Short push	<0.5s	Turn on/off
Short push twice	<0.5s	LED on: Save current brightness level LED off: Delete saved level and turn on at 100% brightness
Short push five times	<3s	Quit Corridor mode
Long push	0.5-14s	Dimming up or down
Long push	15s-2mins	Sync all LEDs to be 100% brightness
Long push	>2mins	Enter Corridor mode - LED keep 100% brightness for 2mins. Then brightness will turn to be 10% within 32s if no action during 2mins 100% brightness.

Note:

1.The factory default brightness is at 100%.

2.Up to 30 drivers can perform the PUSH dimming at the same time when utilizing one common push button

3.The maximum length of the cable from the push button to the last driver is 200 meters.

◆ Corridor mode

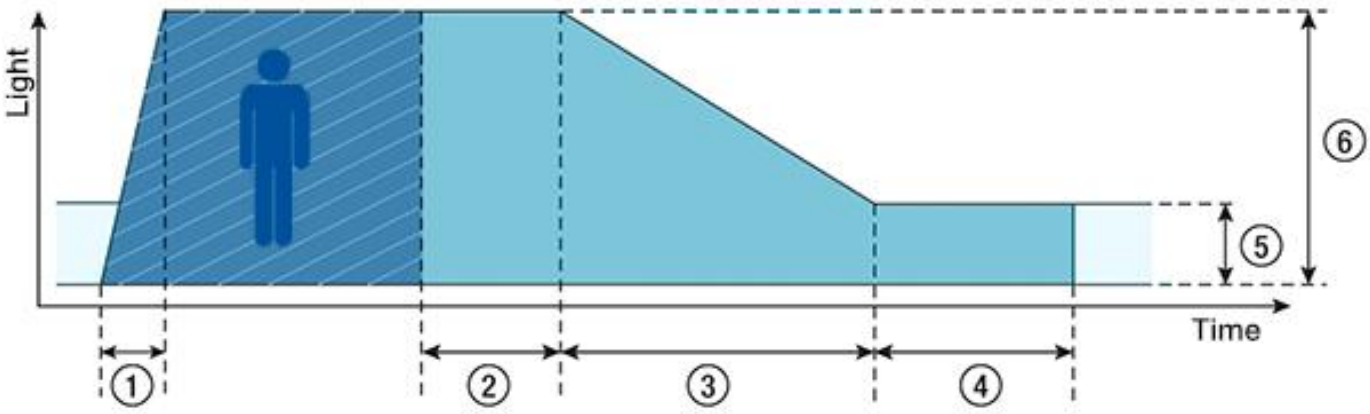

- **①Fade-in time(0.5s):** the time that starts as soon as the presence of a person is detected. During the fade-in time the luminous intensity is faded up to the presence value.
- **②Run-on time(120s):** the time that starts as soon as the presence of a person is no longer detected. If the presence of a person is detected again during the run-on time the run-on time is restarted from zero. If no presence is detected during the run-on time the fade time is started as soon as the run-on time expires.
- **③Fade time(32s):** the time during which the luminous intensity is faded from the presence value to the absence value.
- **④Switch-off delay（Never Off):** the time during which the absence value is held before the lighting is switched off. Depending on the profile selected the switch-off delay may have different values or may not be defined.
- **⑤Absence value(default: 10 %):** the luminous intensity when there is no person present.
- **⑥Presence value (default: 100 %):** the luminous intensity when persons are present.

◆ Operating window

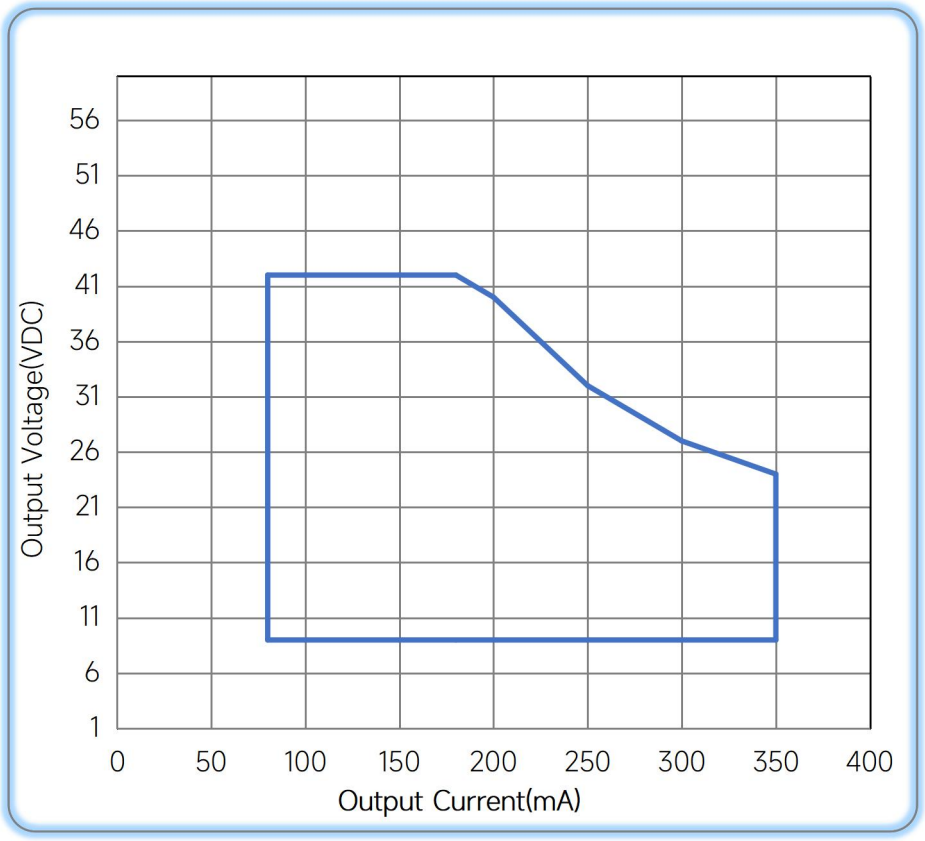

Operating window 100%

◆ Revision Updates

ITEM	BEFORE	AFTER	VERSION	DATE
Initial			A	2024/02/23

Remark:The final interpretation of the contents of the specification belongs to Eaglerise Electric & Electronic (China) Co., Ltd.