30W Constant Current – DIP-Switch

Features

- For luminaries of protection Class I or II, SELV, built-in
- Input Voltage ： 220-240VAC
- Protections: SCP/OLP/OVP/OTP
- Power Factor ： >0.95
- Efficiency: 90%
- 5 years warranty

Applications

- Linear light

■Approve

CE CCC EL SELV

◆ Description

FMS-30-750 LD EXC is a 30W constant current LED driver that operates from 198-264Vac input with 600 to 750mA output current. The output current is selectable by DIP Switch. With it's dimensions from 210 x 30 x 21mm. It is easy to integrate in linear light products. To ensure trouble-free operation, protection is provided against output short circuit, over Load and over temperature.

◆ Model code

FMS-30-750 LD EXC

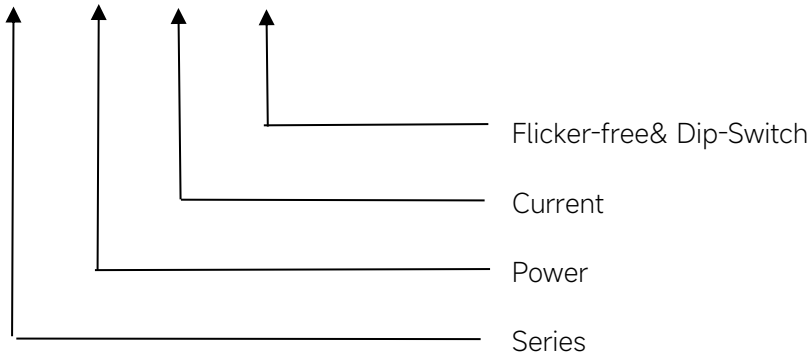

◆ Specification

Output	Constant Current	600mA	650mA	700mA	750mA
	Voltage Range	24-42VDC			24-40VDC
	Unload voltage Max.	59VDC			
	Current Accuracy	±5%			
	Output HF current ripple(≥1KHz)	±3%			
	Output LF current ripple(≤120Hz)	±3%			
	SVM	≤0.4			
	Pst	≤1			
	Efficiency(Typ.)	90%			
Input	Rated input voltage	220-240V			
	Range of input voltage	198-264VAC			
	Maximum voltage	300VAC@1 h maximum,unit might not operate in this abnormal condition			
	Range of input voltage(VDC)	176-280VDC			
	Frequency(Hz)	0/50/60 Hz			
	Power Factor	≥0.95			
	Input Current max	0.2A			
	Start-up time	＜0.5S			
	No Load Power	≤0.5W			
	THD (Typ.)	＜10%.			
Protection	Over Load Protection	102-130%			
		YES/Auto Resume			
	Over Voltage Protection	＞59VDC			
		YES/Auto Resume			
	Short circuit Protection	YES/Auto Resume			
capability	Surge capability (L-N)	2KV			
	Surge capability (L/N-Ground)	2KV			
Environment	Operating Temperature	-20℃~+60℃			
	Humidity	20%-90%RH			
	Tc	80℃			
	Storage Temperature	-25℃~+80℃			
	Life time	＞50000h@Tc=80℃,230VAC			
	Noise	≤25dB(A)@20cm			
Surface	Dimension	210X30X21(LXWXH)mm			
	material	metal case			
Standards	Safety	GB19510. 1, GB19510. 14;EN61347-2- 13;EN62384			
	EMC	GB/T17743, GB17625. 1;EN55015, EN61000-3-2, EN61000-3-3, EN61547;EN61000-4-5;			
	ErP	Erp2.0 EU 2019/2020			

	RoHS	RoHS (2011/65/EU) (EU)2015/863
Note	1.All parameters NOT specially mentioned are measured at 230VAC input , full load and 25℃ of ambient temperature. 2.Ripple & Noise are measured at 20MHz of bandwidth by using a 300mm twisted pair-wire terminated with a 0.1uF & 47 uF parallel capacitor. 3.The DC input for this product is only used for emergency lighting and applies to functional and safety requirements, EMC is not considered.. 4.EL compatible with IEC 61347-2-13 Annex J, compatible with EN 60598-2-22 emergency lighting fixtures, compatible with EN 50172 central battery system applications. 5.The over-temperature protection of the product is provided by the IC. 6.All Eaglerise power supply are complied with EMI regulations. Since they are belong to component and will be installed inside system enclosure. When they are integrated into a system, the EMI characteristics of the system must be re-verified again.	

◆ Parameter

Number	Output				Switch position	
	Current (mA)	Voltage (VDC)	Voltage No load (VDC)	Power (W)	1	2
1	600mA	24-42VDC	59	25.2	--	--
2	650mA			27.3	ON	--
3	700mA			29.4	--	ON
4	750mA	24-40VDC		30	ON	ON

* Factory default

◆ Inrush Current

I^{peak}	Twidth	B10	B16	B20	C10	C16	C20
16.9A	156μs	31pcs	50pcs	63pcs	40pcs	64pcs	80pcs

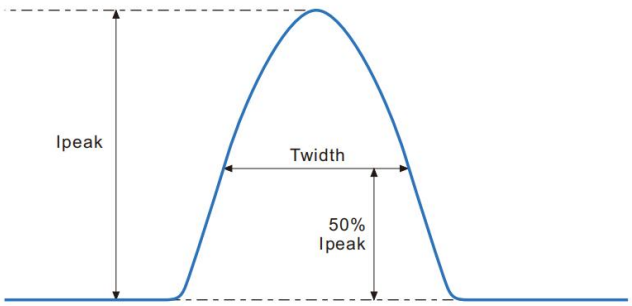

Remarks:

1.The number of drives mounted under different MCBs in the table is the maximum value. Please do not exceed this number during installation.

2.Different brands and models of miniature circuit breakers, the number of drives mounted will be slightly different.

◆ Wiring diagram

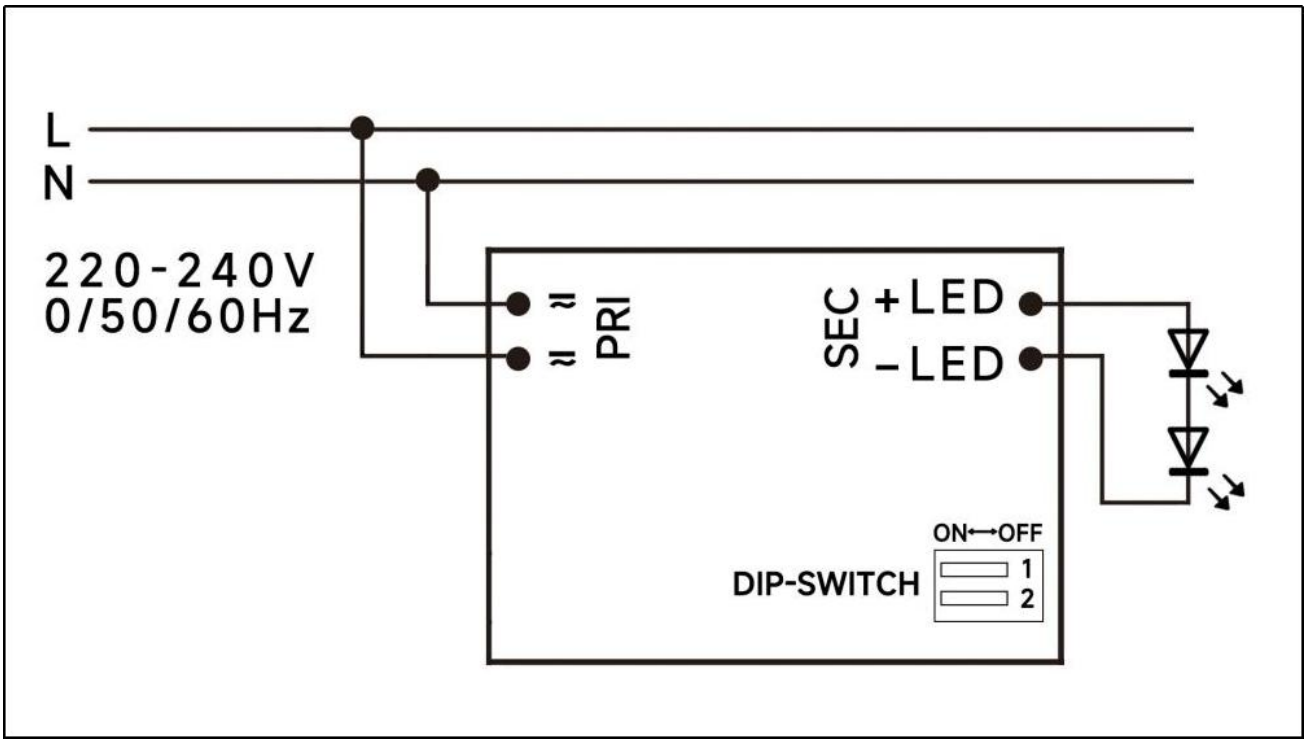

◆ 2D diagram

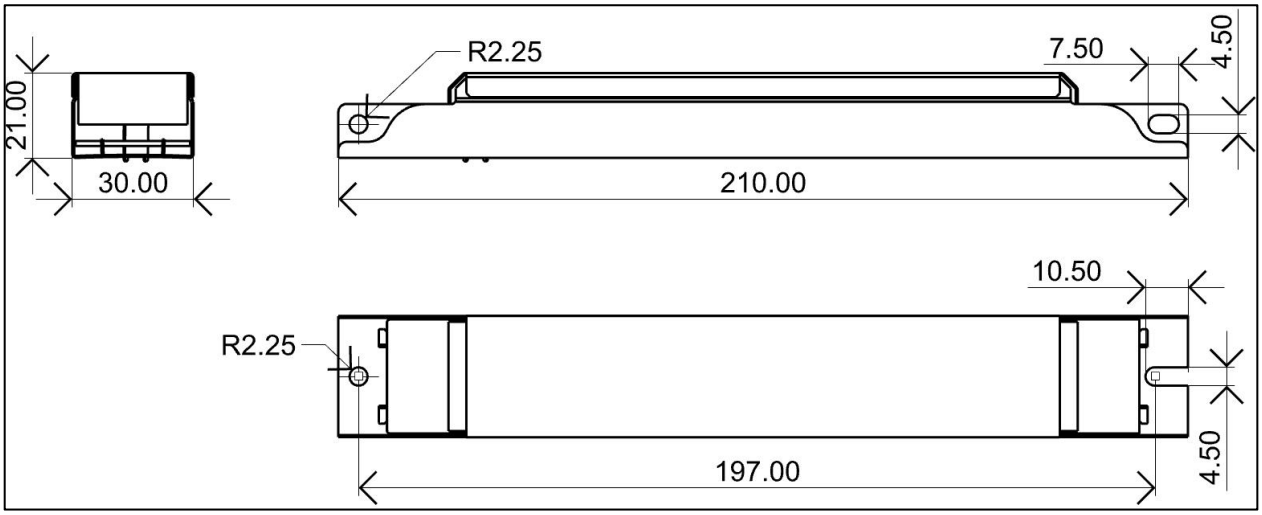

◆ Wiring & Connections

Specification item		Value （Unit ）
Input	Input wire cross-section	0.5...1.5 mm^2 （With side caps：0.75...1.5 mm^2）
	Input wire gauge.	16...20 AWG （With side caps：16...22 AWG ）
	Input wire strip length	7...9mm
Output	Output wire cross-section	0.5...1.5 mm^2
	Output wire gauge.	16...20 AWG
	Output wire strip length	7...9mm

Note:Solid wire is risky to use on an angled terminal.Stranded wire is recommended for this kind of use.

◆ Curve for FMS-30-750 LD EXC, Io=750mA

Lifetime vs. Temperature Curve

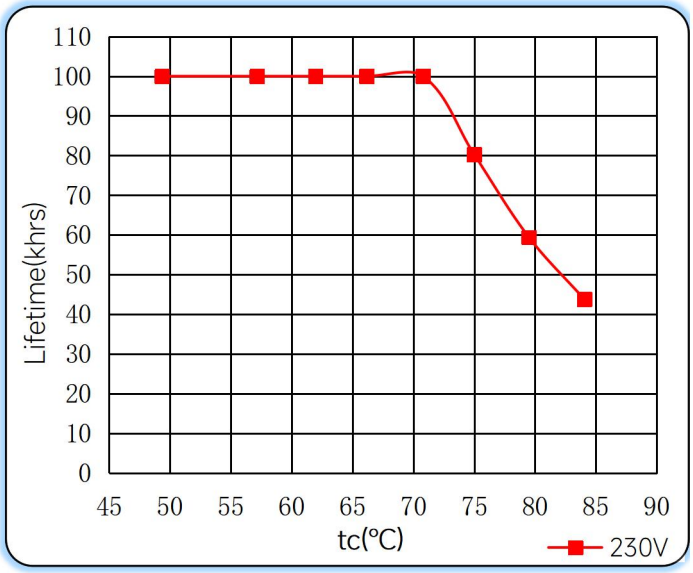

Efficiency vs. Load

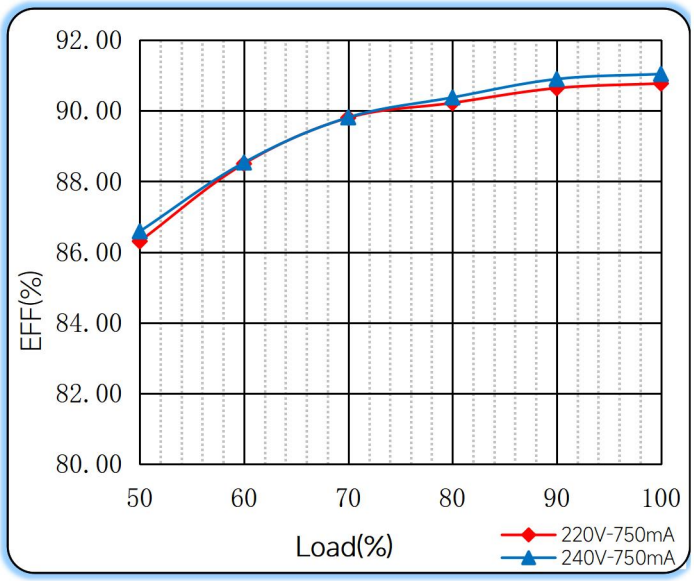

Power Factor Characteristics

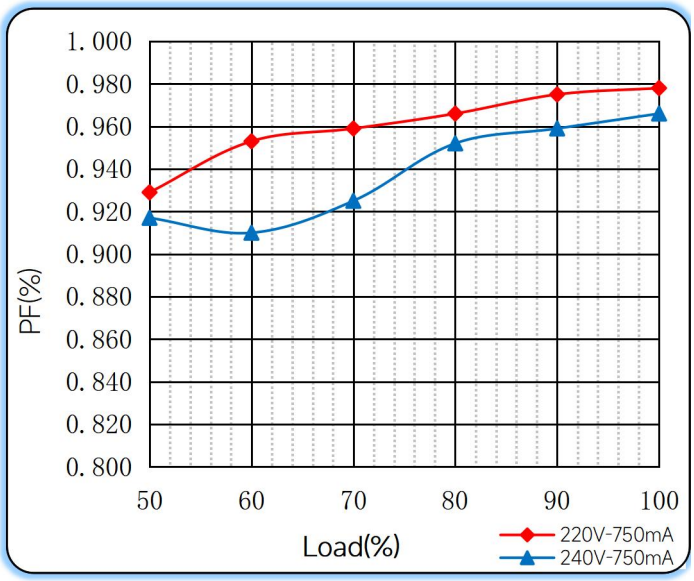

THD vs. Load

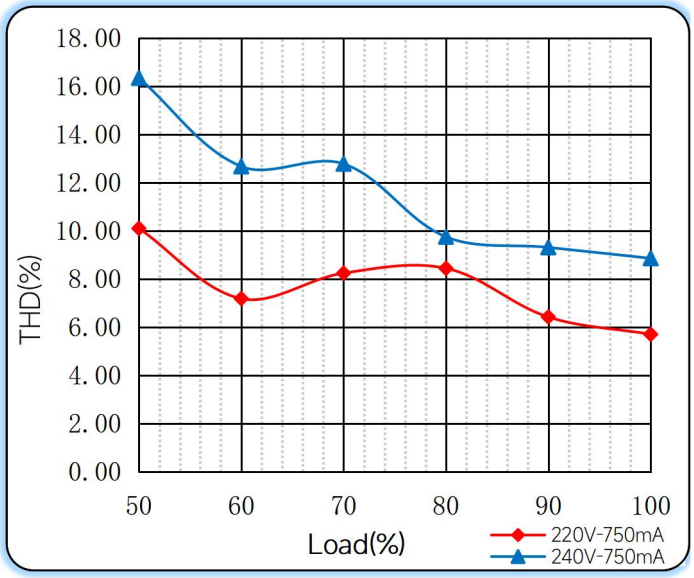

◆ Operating window

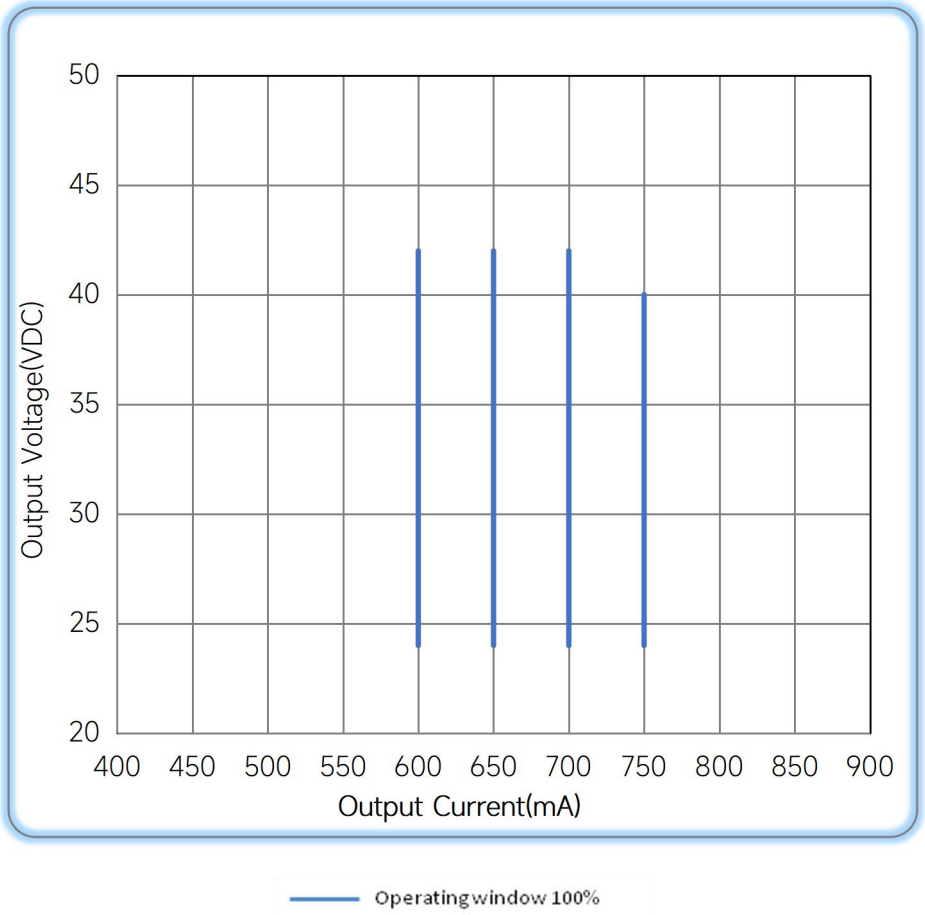

◆ Revision Updates

ITEM	BEFORE	AFTER	VERSION	DATE
Initial			A	2024/08/15
Tc	85℃	80℃	B	2024/10/09

Remark:The final interpretation of the contents of the specification belongs to Eaglerise Electric & Electronic (China) Co., Ltd.