60W Constant Current -FMS Series

Features

- Class I , Non-isolated, Built-in
- Input Voltage :220-240VAC
- Protections: SCP/OLP/OVP/OTP
- Power Factor: 0.95(Typ.)
- Efficiency: ≥92% (Typ.)
- Adjustable Output Current with dip-switch
- 5 years warranty
- IP20

Applications

- Linear light

■Approve

◆ Description

FMS-60-350 N-S LD1 E is a 60W constant current LED driver that operates from 198-264Vac input with 200 to 350mA output current. The output current is adjustable by DIP Switch. With it's dimensions from 190 x 30 x 21mm. It is easy to integrate in linear light products.To ensure trouble-free operation, protection is provided against output short circuit, over voltage and over temperature.

◆ Model code

FMS-60-350 N-S LD1 E

- Flicker-free
- Non-Isolated design
- Current
- Power
- Series

◆ Specification

Output	Constant Current	200mA	250mA	300mA	350mA
	Voltage Range	70-200VDC			70-172VDC
	Unload voltage Max.	250VDC			
	Current Accuracy	±5%			
	Output LF current ripple(≤120Hz)	±5%			
	SVM	≤0.4			
	Pst	≤1			
	Efficiency(Typ.)	≥92% @Full load ,220-240V			
Input	Rated input voltage	220-240VAC			
	Range of input voltage	198-264VAC			
	Maximum voltage	300VAC@1 h maximum,unit might not operate in this abnormal condition			
	Range of input DC voltage(VDC)	176-280VDC			
	Frequency(Hz)	0/50/60 Hz			
	Displacement factor	≥0.95			
	Power Factor	≥0.95 @Full load ,220-240V			
	Input Current max	0.38A			
	Start-up time	＜0.5S			
	No Load Power	≤0.5W			
	THD (Typ.)	<10%@Full load ,220-240V			
Protection	Over Load Protection	103-140%			
		YES/Auto Resume			
	Over Voltage Protection	>250V			
		YES/Auto Resume			
	Short circuit Protection	YES/Auto Resume			
	Over Temperature Protection	YES/Auto Resume			
		Ta≥75° C，reducing the output current			
capability	Surge capability (L-N)	2KV			
	Surge capability (L/N-Ground)	2KV			
Environment	Operating Temperature	-20℃~+50℃			
	Humidity	20%-90%RH			
	Tc	85℃			
	Storage Temperature	-25℃~+60℃			
	Life time	＞50000h@Tc=75℃,230VAC			
	Noise	≤25dB(A)@20cm			
Surface	Dimension	190X30X21(LXWXH)mm			
	material	metal case			
Standards	Safety	GB19510. 1, GB19510. 14；IEC61347- 1, IEC61347-2- 13；EN61347- 1, EN61347-2-13, EN62384;			

	EMC	GB/T17743, GB17625. 1; EN55015, EN61000-3-2, EN61000-3-3, EN61547; EN61000-4-5
	ErP	Erp2.0 EU 2019/2020
	RoHS	RoHS (2011/65/EU) (EU)2015/863
Note	1.All parameters not specially mentioned are measured at 230VAC input, full load and 25℃ of ambient temperature. 2.Ripple & Noise are measured at 20MHz of bandwidth by using a 300mm twisted pair-wire terminated with a 0.1uF & 47 uF parallel capacitor. 3.Switch and dimmer are not recommended to connect between this product output and luminaries. 4.The DC input for this product is only used for emergency lighting and applies to functional and safety requirements, EMC is not considered.. 5.EL compatible with IEC 61347-2-13 Annex J, compatible with EN 60598-2-22 emergency lighting fixtures, compatible with EN 50172 central battery system applications. 6.All Eaglerise power supply are complied with EMI regulations. Since they are belong to component and will be installed inside system enclosure. When they are integrated into a system, the EMI characteristics of the system must be re-verified again.	

◆ Parameter

Number	Output				Switch position	
	Current (mA)	Voltage (VDC)	Voltage No load (VDC)	Power (W)	1	2
1	200mA	70-200	250	40W	--	--
2	250mA			50W	ON	--
3	300mA			60W	--	ON
*4	350mA	70-172		60.2W	ON	ON

* Factory default

◆ Inrush Current

I^{peak}	Twidth	B10	B16	B20	C10	C16	C20
34.5A	**196μs**	12pcs	19pcs	24pcs	20pcs	32pcs	40pcs

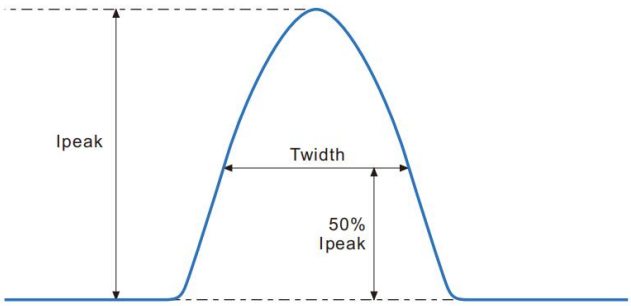

Remarks:
1.The number of drives mounted under different MCBs in the table is the maximum value. Please do not exceed this number during installation.
2.Different brands and models of miniature circuit breakers, the number of drives mounted will be slightly different.

◆ Wiring diagram

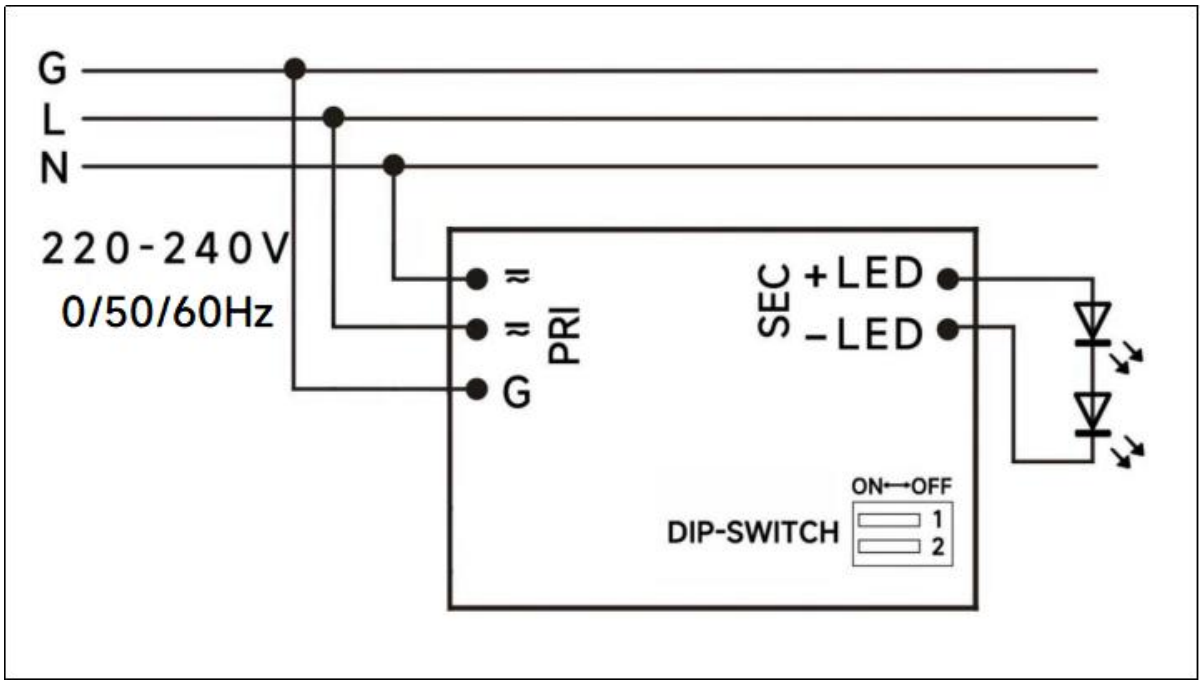

◆ 2D diagram

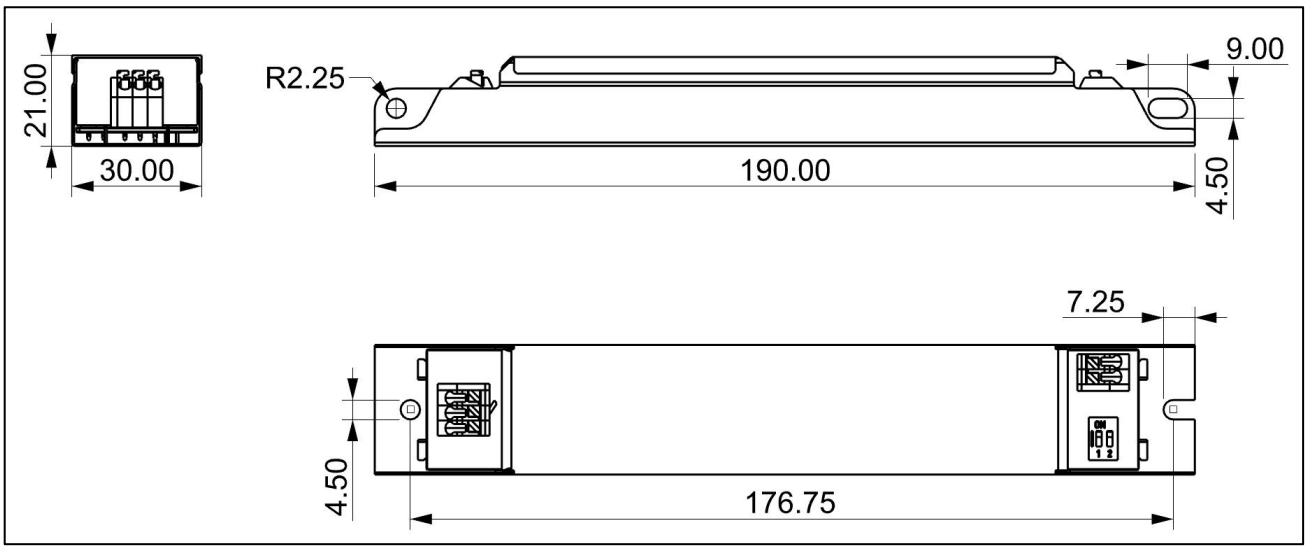

◆ Wiring & Connections

Specification item		Value （Unit ）
Input	Input wire cross-section	0.5...1.5 mm^2
	Input wire gauge.	16...20 AWG
	Input wire strip length	7...9mm
Output	Output wire cross-section	0.5...1.5 mm^2
	Output wire gauge.	16...20 AWG
	Output wire strip length	7...9mm

Note:Solid wire is risky to use on an angled terminal.Stranded wire is recommended for this kind of use.

◆ Curve for FMS-60-350 N-S LD1 E, Io=350mA

Lifetime vs. Temperature Curve

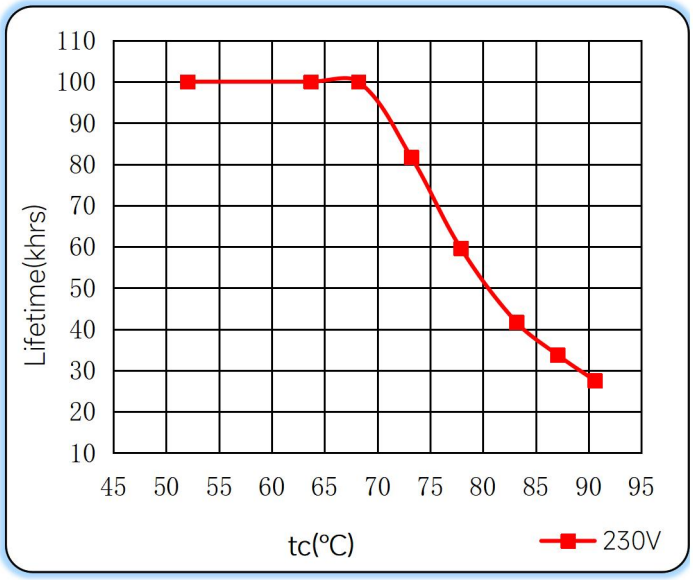

Efficiency vs. Load

Power Factor Characteristics

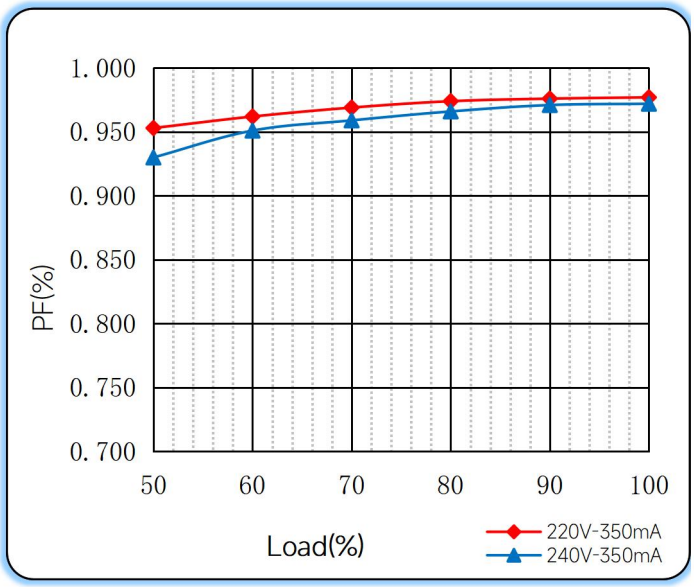

THD vs. Load

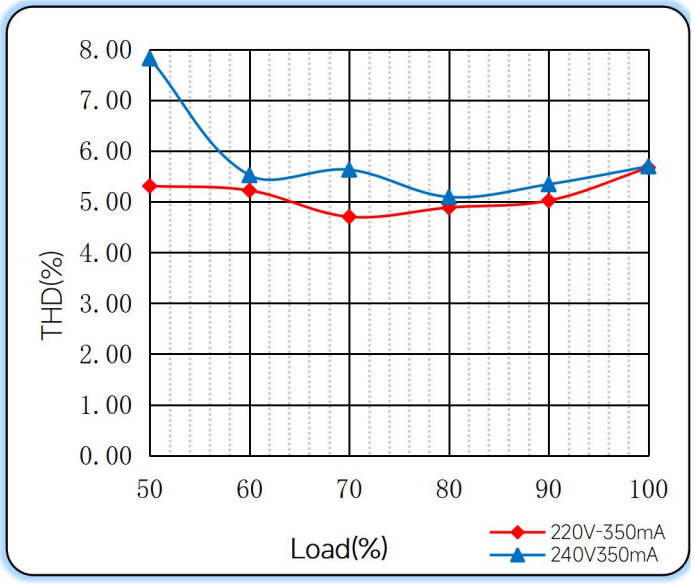

◆ Operating window

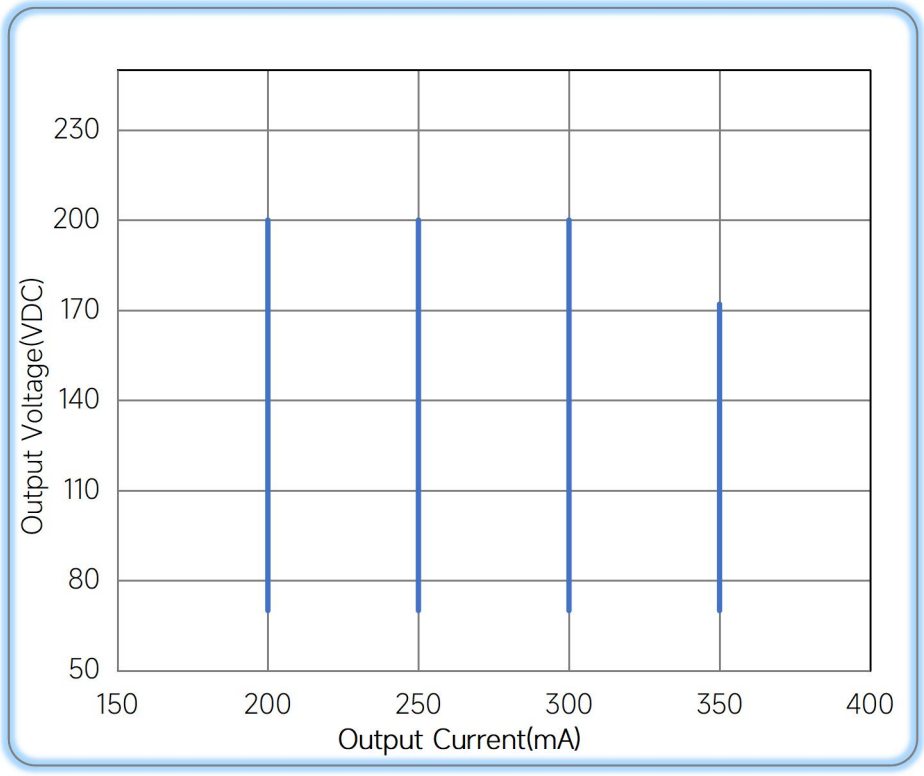

Operating window 100%

◆ Revision Updates

ITEM	BEFORE	AFTER	VERSION	DATE
Initial			A	2024/01/09
Life time	50000h@Tc=80°C,230VAC	50000h@Tc=75°C,230VAC	B	2024/02/22

Remark:The final interpretation of the contents of the specification belongs to Eaglerise Electric & Electronic (China) Co., Ltd.