15W Triac Dimming power supply

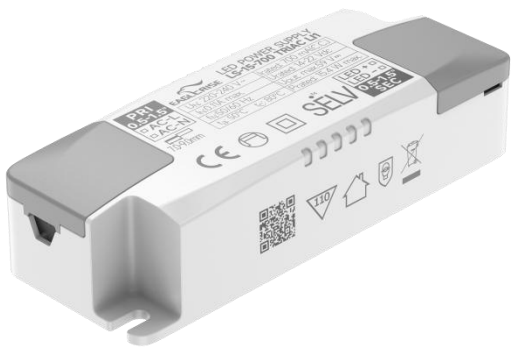

■Approve

CECB SELV

Features

- For luminaries of protection Class II, SELV, Independent
- Input Voltage: 220-240VAC
- Protections: SCP/OLP/OVP/OTP
- Power Factor: 0.95
- Efficiency: 82%
- 5 years warranty
- IP20

Applications

- LED panel、LED down light

◆ Description

LS-15-XXX TRIAC LI1 is a 15W constant current LED driver that operates from 198-264Vac input with 250-700mA output current. With it's compact dimensions from 102 x 38.2 x 25 mm it is easy to integrate in LED panel, pendant light and down light products. To ensure trouble-free operation, protection is provided against output short circuit and over Load.

◆ Model code

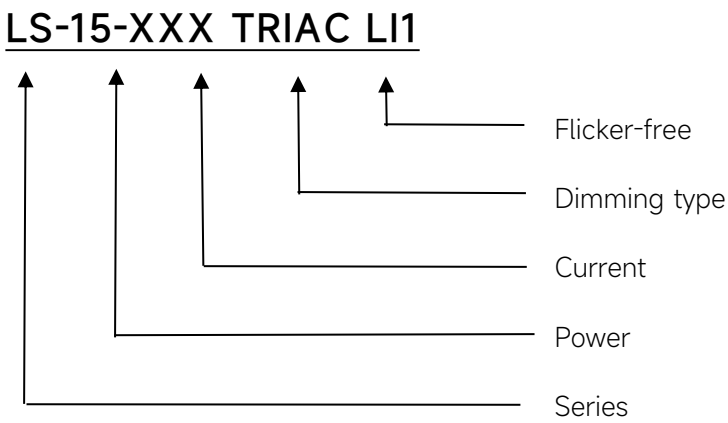

◆ Specification

Output	Constant Current (mA)	250	280	300	350	...	700
	Voltage Range(VDC)	28-40				...	14-22
	Unload voltage Max.	59VDC					
	Current Accuracy	±5%@220-240V					
	Output HF current ripple(≥1KHz)	±5%					
	Output LF current ripple(≤120Hz)	±5%					
	SVM	≤0.4					
	Pst	≤1					
	Efficiency(Typ.)	≥82%@Full load,230V					
Input	Rated input voltage	220-240VAC					
	Range of input voltage	198-264VAC					
	Maximum voltage	300VAC@1 h maximum,unit might not operate in this abnormal condition					
	Frequency(Hz)	50/60 Hz					
	Displacement factor	≥0.9					
	Power Factor	0.95					
	Input Current max (mA)	0.11A					
	Start-up time	＜0.5S					
	No Load Power	≤0.5W					
	THD (Typ.)	<25%@Full load,230V					
Dimming	Dimming	YES					
	Dimming mode	Triac，Leading edge & trailing edge dimmable					
	Dimming depth	10%@220-240V					
	Dimming current range	10 ~ 100%					
Protection	Over Load Protection	103-130%					
		YES/Auto Resume					
	Over Voltage Protection	59VDC					
		YES/Auto Resume					
	Short circuit Protection	YES/Auto Resume					
capability	Surge capability (L-N)	1KV					
	Surge capability (L/N-Ground)	NA					
Environment	Operating Temperature	-20℃~+50℃					
	Humidity	20%-90%RH					
	Tc	85℃@400-600mA,80℃@250-350,650-700mA					
	Storage Temperature	-25℃~+60℃					
	Life time	＞50000h@Tc=75℃					
	Ripple&Noise	≤30dB(A)@20cm					
Surface	Dimension	102 x38.2 x 25mm					
	material	PC					

Standards	Safety	GB19510. 1, GB19510. 14;IEC61347- 1, IEC61347-2- 13;EN61347- 1, EN61347-2-13; EN62384
	EMC	GB/T17743, GB17625. 1;EN55015, EN61000-3-2, EN61000-3-3, EN61547;EN61000-4-5;EN61000-4-2,3,4,5,6,8,11, EN61547
	Energy Efficiency	Erp2.0 EU 2019/2020
	RoHS	RoHS (2011/65/EU) (EU)2015/863
Note	1.All parameters not specially mentioned are measured at 230VAC input , full load and 25℃ of ambient temperature. 2.Ripple & Noise are measured at 20MHz of bandwidth by using a 300mm twisted pair-wire terminated with a 0.1uF & 47 uF parallel capacitor. 3.The over-temperature protection of the product is provided by the IC. 4.All Eaglerise power supply are complied with EMI regulations. Since they are belong to component and will be installed inside system enclosure. When they are integrated into a system, the EMI characteristics of the system must be re-verified again.	

◆ Model list

Number	Model number	Output			
		Current (mA)	Voltage (VDC)	Voltage No load (VDC)	Power (W)
1	LS-15-250 TRIAC LI1	250	28-40	59	10
2	LS-15-280 TRIAC LI1	280			11.2
3	LS-15-300 TRIAC LI1	300			12
4	LS-15-350 TRIAC LI1	350			14
5	LS-15-400 TRIAC LI1	400	25-38		15.2
6	LS-15-450 TRIAC LI1	450	22-33		14.9
7	LS-15-500 TRIAC LI1	500	20-30		15
8	LS-15-550 TRIAC LI1	550	17-27		14.9
9	LS-15-600 TRIAC LI1	600	16-25		15
10	LS-15-650 TRIAC LI1	650	16-23		15
11	LS-15-700 TRIAC LI1	700	14-22		15.4

◆ Inrush Current

I_{peak}	Twidth	B10	B16	B20	C10	C16	C20
1.92A	63.2μs	72pcs	116pcs	145pcs	72pcs	116pcs	145pcs

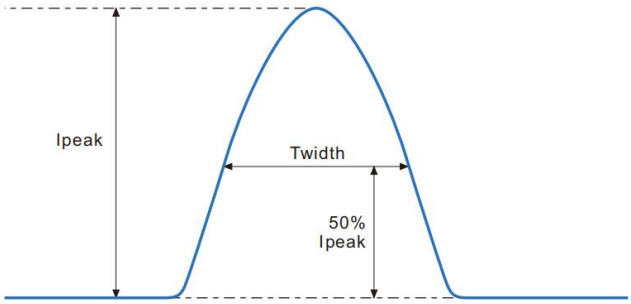

Remarks:

1.The number of drives mounted under different MCBs in the table is the maximum value. Please do not exceed this number during installation.

2.Different brands and models of miniature circuit breakers, the number of drives mounted will be slightly different.

◆ Wiring diagram

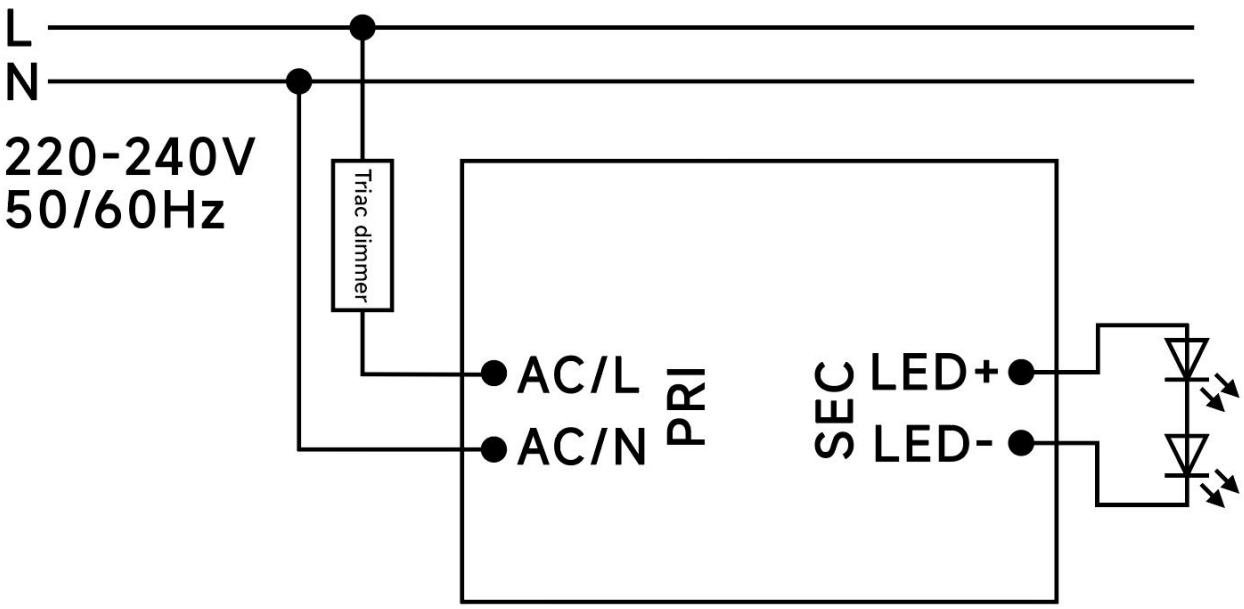

◆ 2D diagram

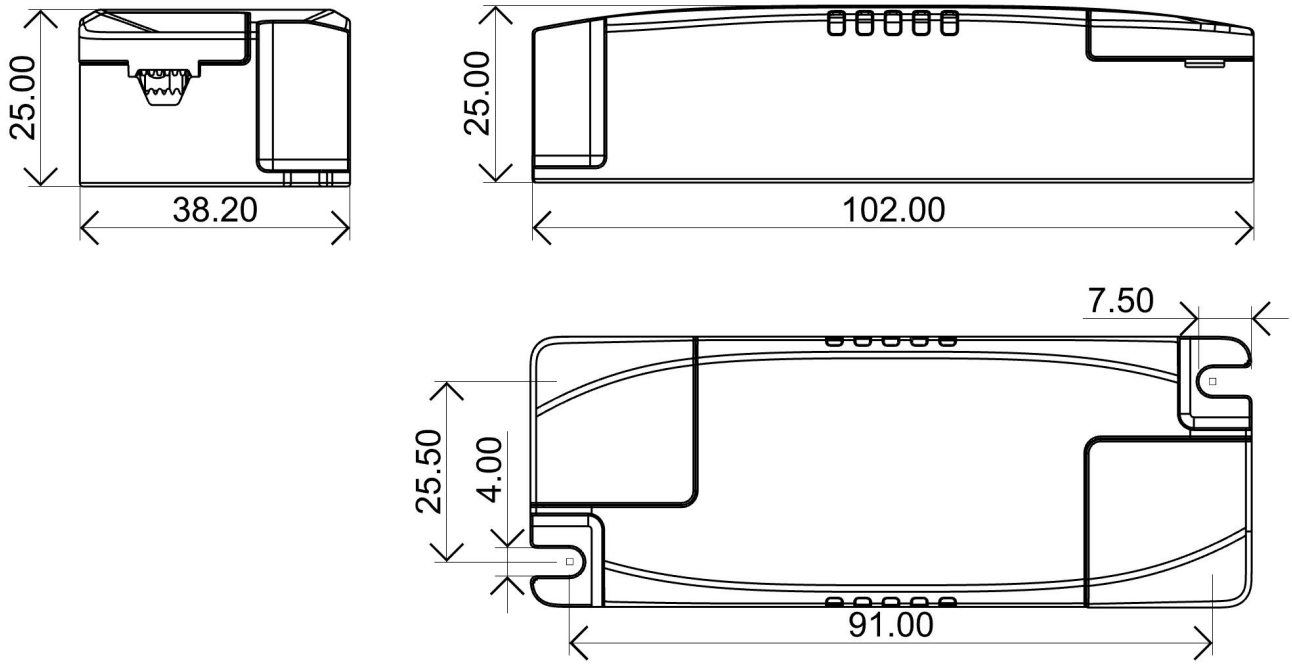

Terminal

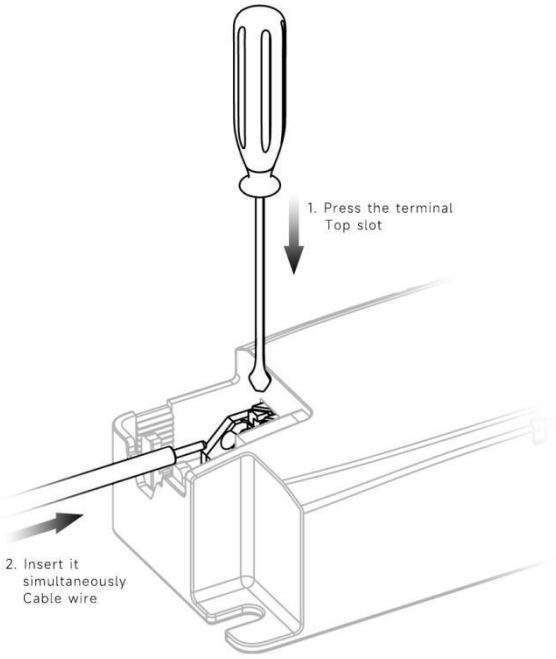

◆ Wiring & Connections

Specification item		Value （Unit ）
Input	Input wire cross-section	0.5...1.5 mm^2
	Input wire gauge.	16...20 AWG
	Input wire strip length	7...9mm
Output	Output wire cross-section	0.5...1.5 mm^2
	Output wire gauge.	16...20 AWG
	Output wire strip length	7...9mm

◆ Recommended wire

Wire cross-section	Wire type
2*0.5mm^2	H03VVH2-F 2core
2*0.75mm^2	H03VVH2-F 2core
1.5mm^2	CCC 08(RV-90)
16AWG(1.25mm^2)	UL1015

Note:Solid wire is risky to use on an angled terminal.Stranded wire is recommended for this kind of use.

◆ Packaging

Model	Product Dimensions(mm)	weight/piece	Outer carton dimension(mm)	Quantity/carton	Net weight/carton(Kg)	Gross weight/carton(Kg)
LS-15-XXX TRIAC LI1	102X38.2X25mm	0.061	370X275X215mm	150	9.15	9.77

◆ Curve for LS-15-XXX TRIAC LI1, Io=700mA

Lifetime vs. Temperature Curve

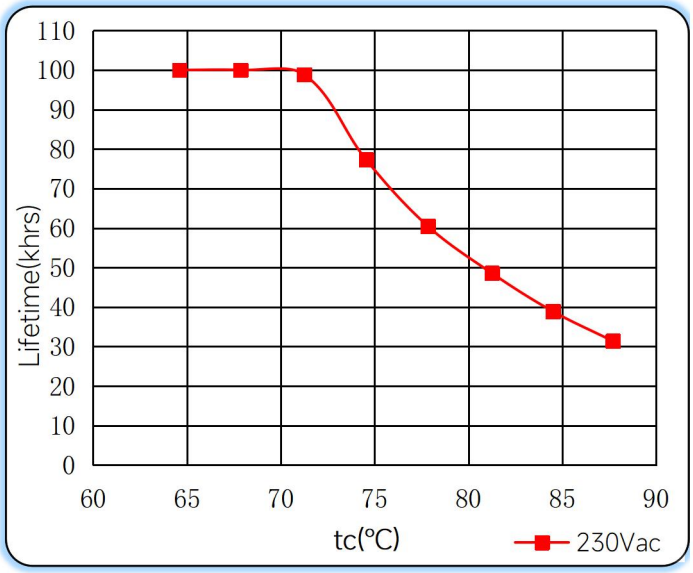

Efficiency vs. Load

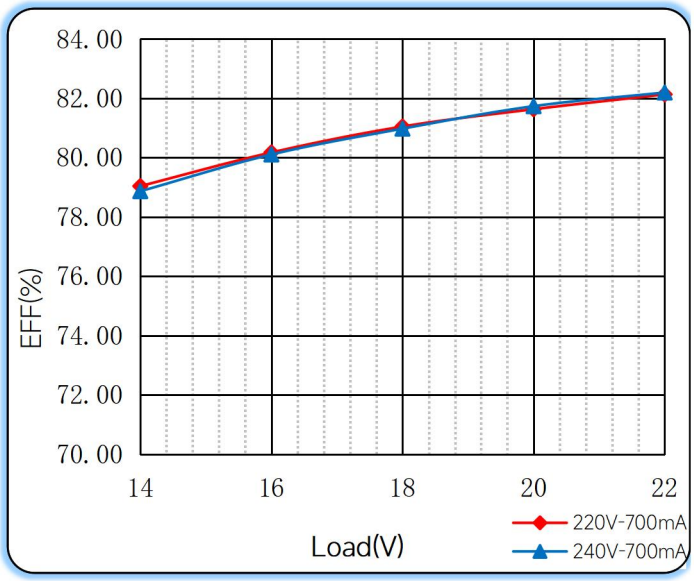

Power Factor Characteristics

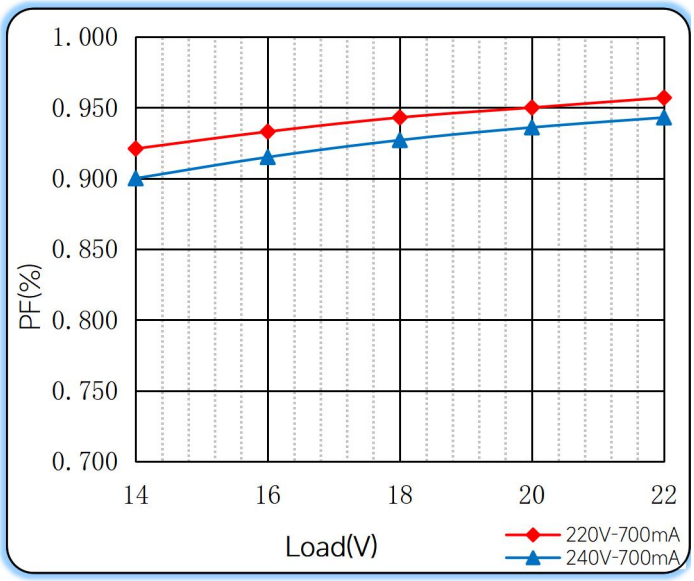

THD vs. Load

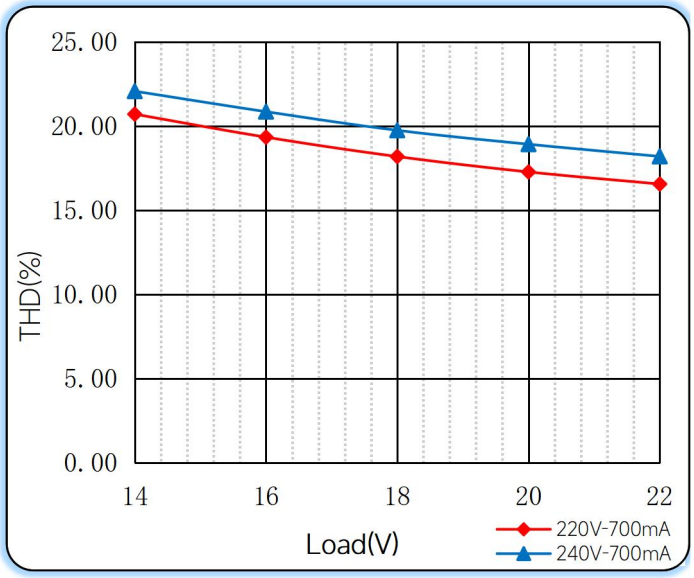

◆ Operating window

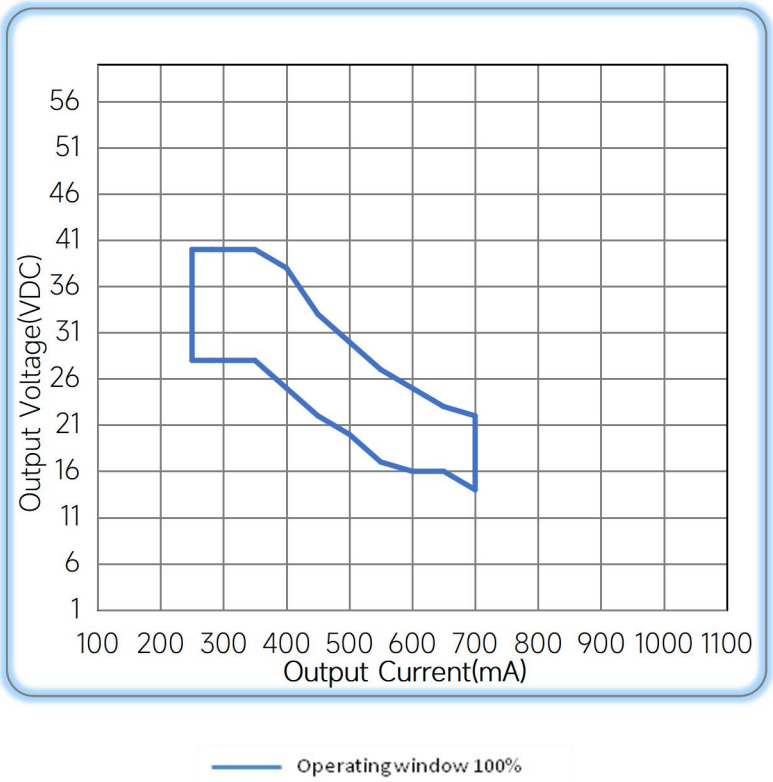

◆ Revision Updates

ITEM	BEFORE	AFTER	VERSION	DATE
Initial			A	2024/08/15
Tc	85°C	85°C@400-600mA,80°C @250-350,650-700mA	B	2025/02/11

Remark:The final interpretation of the contents of the specification belongs to Eaglerise Electric & Electronic (China) Co., Ltd.