150W constant Voltage-LS Series

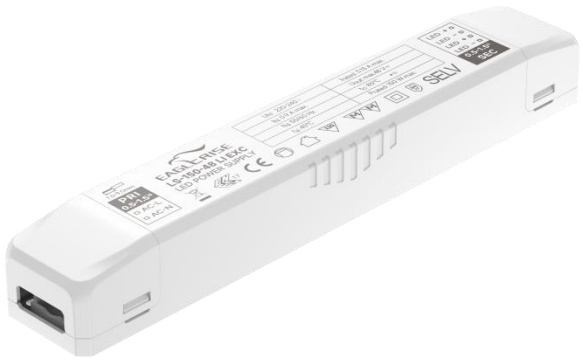

Features

- Class II，SELV，Independent
- Input Voltage 220-240VAC
- Protections: SCP/OLP/OVP/OTP
- Power Factor：≥0.9（Typ.）
- Efficiency：≥93%（Typ.）
- 5 years warranty

Applications

- LED strips

■Approve

CE CB SELV

EL

◆ Description

LS-150-XX LI EXC is a 150W constant voltage LED driver that operates from 198-264Vac input with 24V output voltage. With it's compact dimensions from 227 x 38 x 30mm. It is easy to integrate in LED strips products. To ensure trouble-free operation, protection is provided against output short circuit and over Load.

◆ Model code

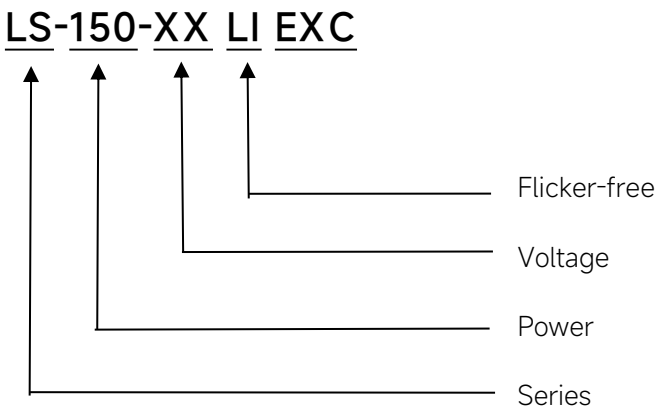

◆ Specification

Output	Constant Voltage	24±1VDC	48±1VDC
	Current Range	0-6.25A	0-3.13A
	Voltage Accuracy	±5%	
	Output HF current ripple(≥1KHz)	±5%	
	Output LF current ripple(≤120Hz)	±5%	
	SVM	≤0.4	
	Pst	≤1	
	Efficiency(Typ.)	≥93%@Full load,230V	
Input	Rated input voltage	220-240V	
	Range of input voltage	198-264VAC	
	Range of input DC voltage(VDC)	176-280VDC	
	Frequency(Hz)	0/50/60 Hz	
	Displacement factor	≥0.9	
	Power Factor	≥0.95@Full load,230V	
	Input Current max	0.9A	
	Start-up time	＜0.5S	
	No Load Power	≤0.5W	
	THD (Typ.)	＜15%@Full load,230V	
Protection	Over Load Protection	105-150%	
		YES/Auto Resume	
	Over Voltage Protection	＞25.2Vdc	＞50.4Vdc
		YES/Auto Resume	
	Short circuit Protection	YES/Auto Resume	
	Over Temperature Protection	YES/Auto Resume	
capability	Surge capability (L-N)	1KV	
	Surge capability (L/N-Ground)	2KV	
Environment	Operating Temperature	-20℃~+45℃	
	Humidity	20%-90%RH	
	Tc	90℃	
	Storage Temperature	-20℃~+60℃	
	Life time	＞50000h@Tc=90℃	
	Ripple & Noise	≤25dB(A)@20cm	
Surface	Dimension	227X38X30(LXWXH)mm	
	material	PC	
Standards	Safety	GB19510. 1, GB19510. 14;IEC61347- 1, IEC61347-2- 13;EN61347- 1, EN61347-2-13;EN62384;	

	EMC	GB/T17743, GB17625. 1;EN55015, EN61000-3-2, EN61000-3-3, EN61547;EN61000-4-5;EN61000-4-2,3,4,5,6,8,11, EN61547
	Energy Efficiency	Erp2.0 EU 2019/2020
	RoHS	RoHS (2011/65/EU) (EU)2015/863
Note	1.All parameters NOT specially mentioned are measured at 240VAC input , full load and 25℃ of ambient temperature. 2.Ripple & Noise are measured at 20MHz of bandwidth by using a 300mm twisted pair-wire terminated with a 0.1uF & 47 uF parallel capacitor. 3.The efficiency testing will be affected by the instrument used and the results may also be different. 4.EL compatible with IEC 61347-2-13 Annex J, compatible with EN 60598-2-22 emergency lighting fixtures, compatible with EN 50172 central battery system applications. 5.All Eaglerise power supply are complied with EMI regulations. Since they are belong to component and will be installed inside system enclosure. When they are integrated into a system, the EMI characteristics of the system must be re-verified again.	

◆ Inrush Current

I_{peak}	T_{width}	B10	B16	B20	C10	C16	C20
46A	**396μs**	4pcs	6pcs	8pcs	7pcs	11pcs	14pcs

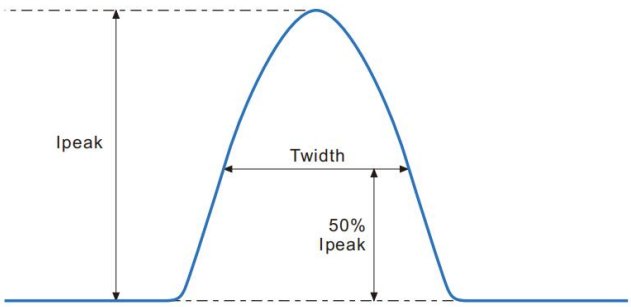

Remarks:
1.The number of drives mounted under different MCBs in the table is the maximum value. Please do not exceed this number during installation.
2.Different brands and models of miniature circuit breakers, the number of drives mounted will be slightly different.

◆ Wiring diagram

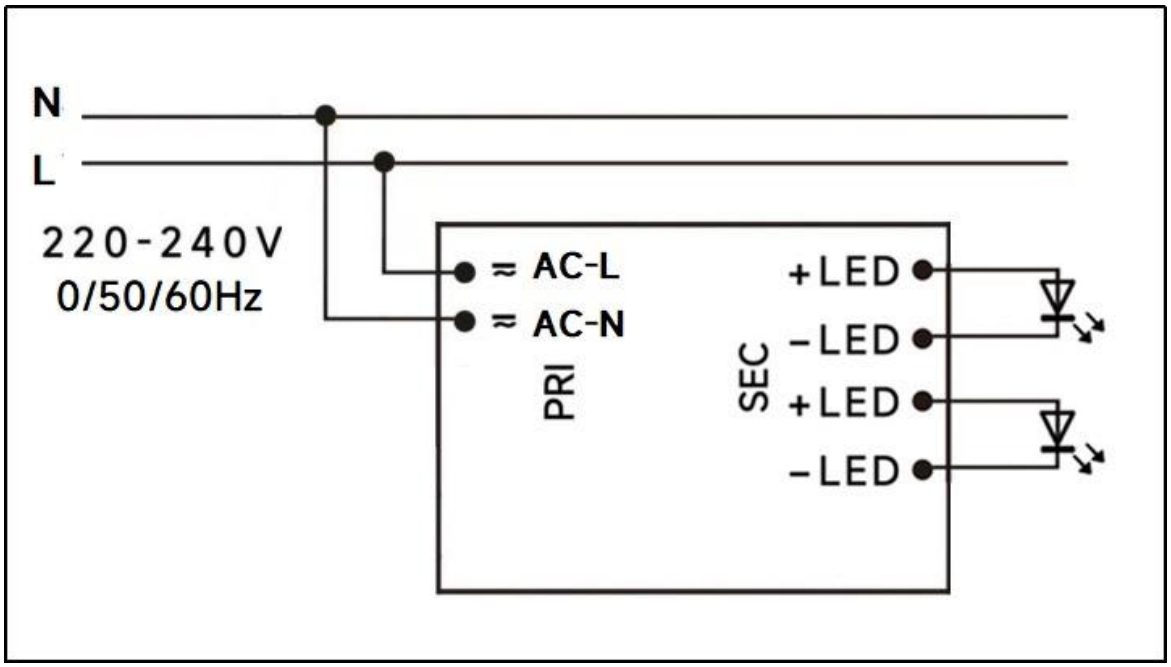

◆ 2D diagram

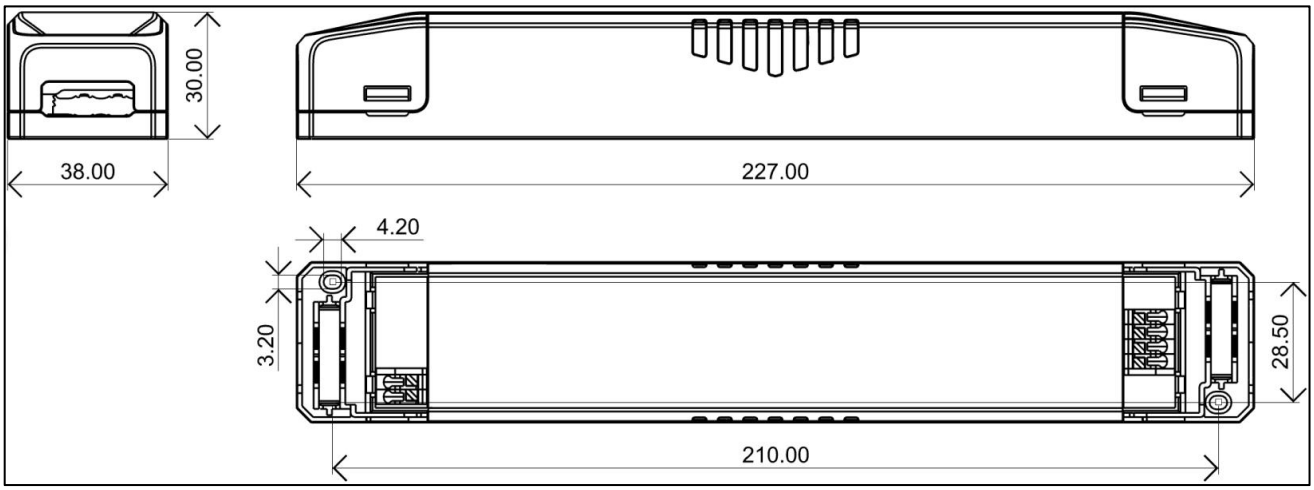

Terminal

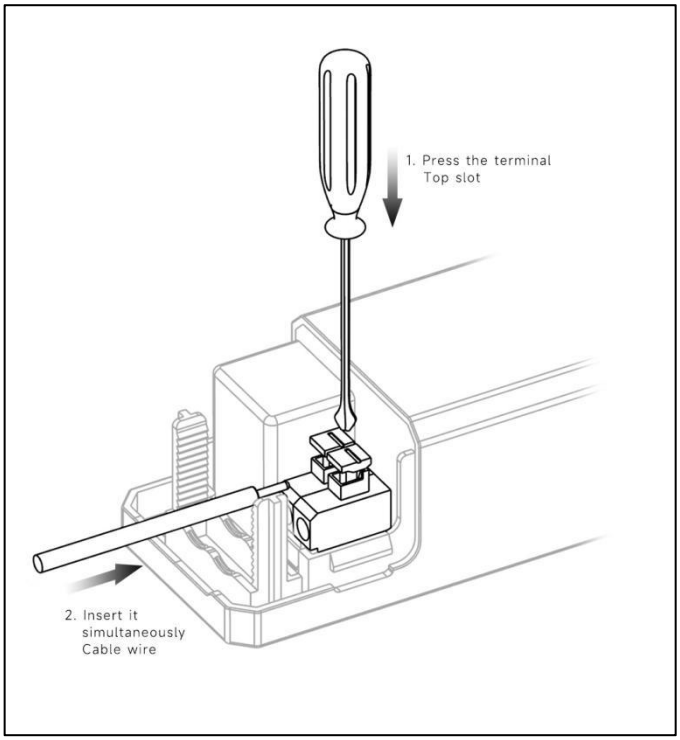
1. Press the terminal
Top slot
2. Insert it
simultaneously
Cable wire

◆ Wiring & Connections

Specification item		Value （Unit ）
Input	Input wire cross-section	0.5...1.5 mm^2
	Input wire gauge.	16...20 AWG
	Input wire strip length	7...9mm
Output	Output wire cross-section	0.5...1.5 mm^2
	Output wire gauge.	16...20 AWG
	Output wire strip length	7...9mm

◆ Curve for LS-150-24 LI EXC

Lifetime vs. Temperature Curve

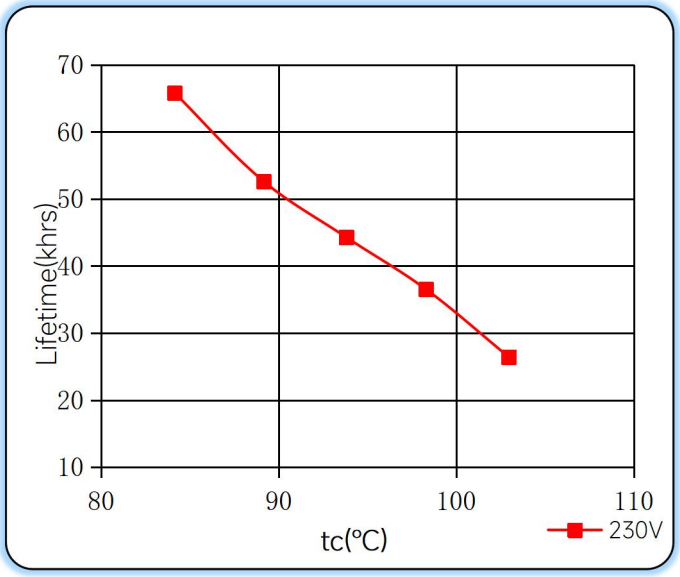

Efficiency vs. Load

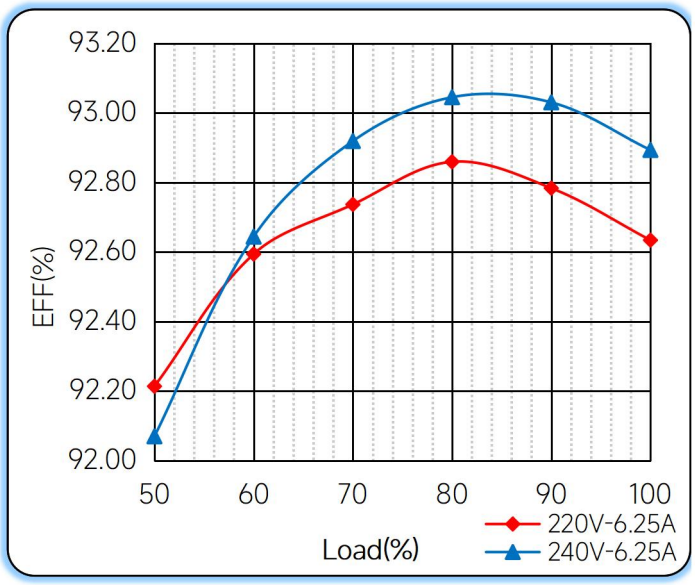

Power Factor Characteristics

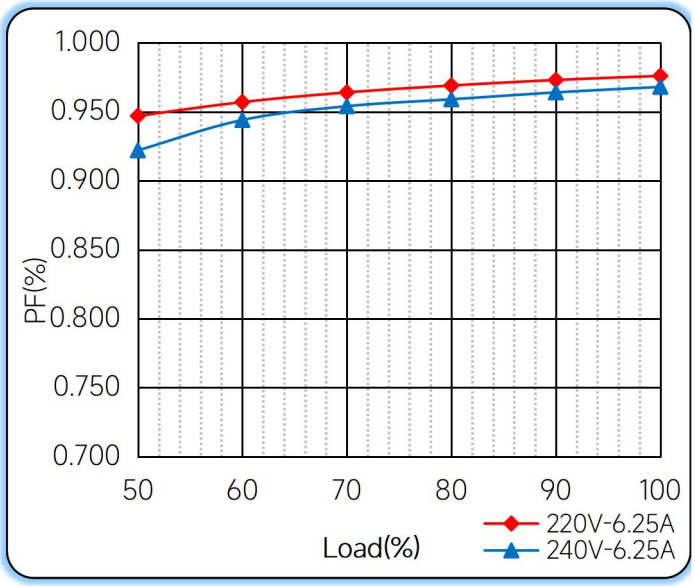

THD vs. Load

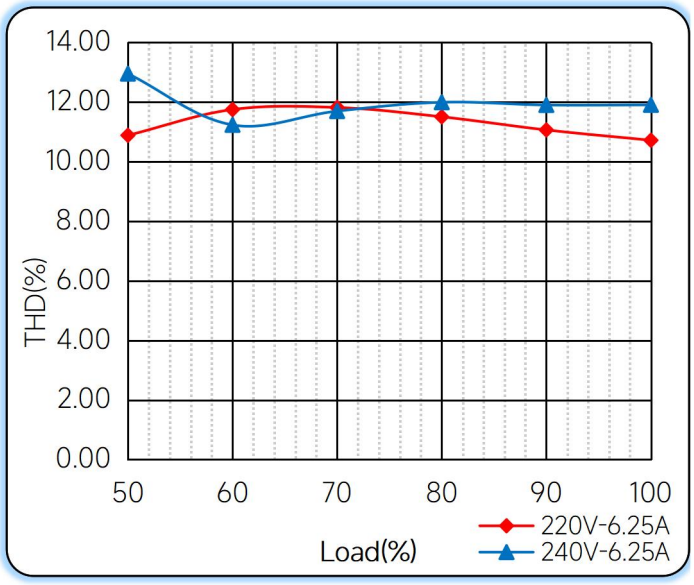

◆ Operating window

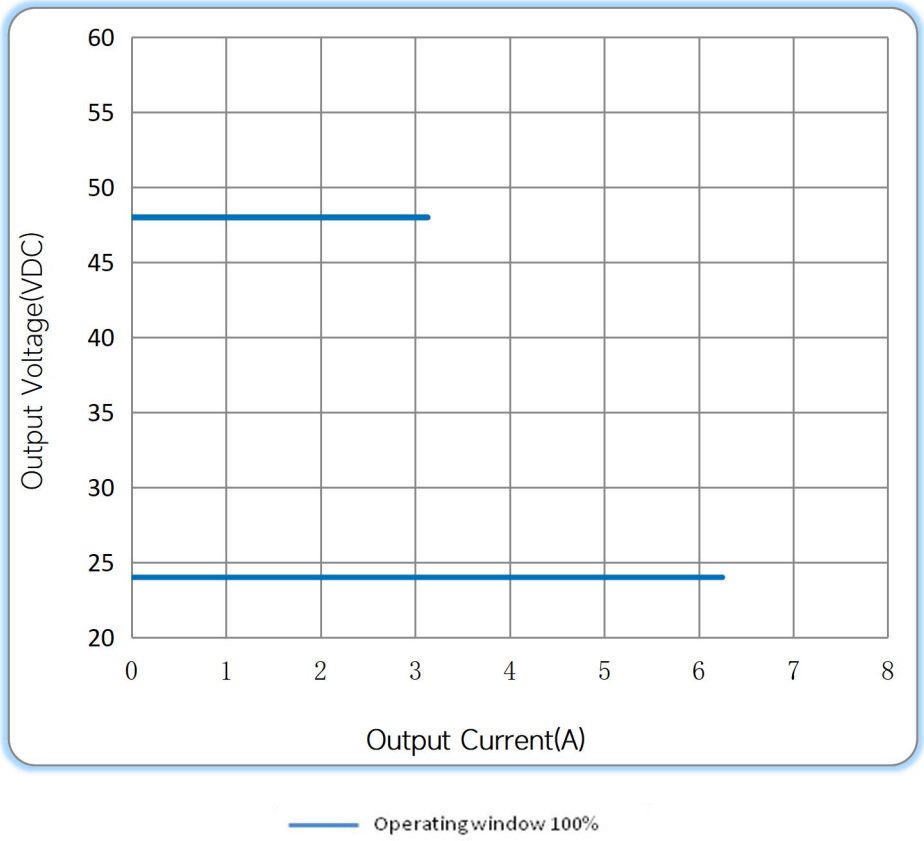

◆ Revision Updates

ITEM	BEFORE	AFTER	VERSION	DATE
Initial			A	2023/07/12
Efficiency	91%	93%	B	2023/11/11

Remark:The final interpretation of the contents of the specification belongs to Eaglerise Electric & Electronic (China) Co., Ltd.