20W Triac Dimming power supply

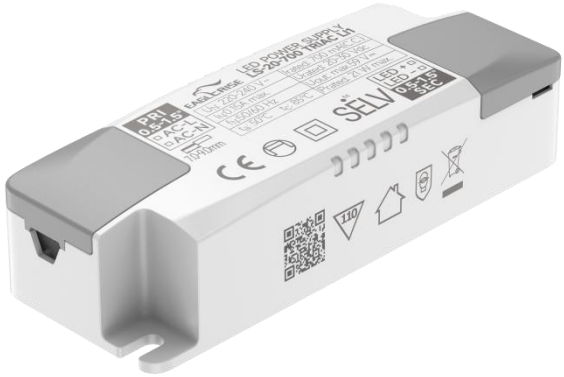

■Approve

CECB SELV

Features

- For luminaries of protection Class II, SELV, Independent
- Input Voltage: 220-240VAC
- Protections: SCP/OLP/OVP/OTP
- Power Factor: 0.95
- Efficiency: 85%
- 5 years warranty
- IP20

Applications

- LED panel、LED down light

◆ Description

LS-20-XXX TRIAC LI1 is a 20W constant current LED driver that operates from 198-264Vac input with 300-700mA output current. With it's compact dimensions from 102 x 38.2 x 25 mm it is easy to integrate in LED panel, pendant light and down light products. To ensure trouble-free operation, protection is provided against output short circuit and over Load.

◆ Model code

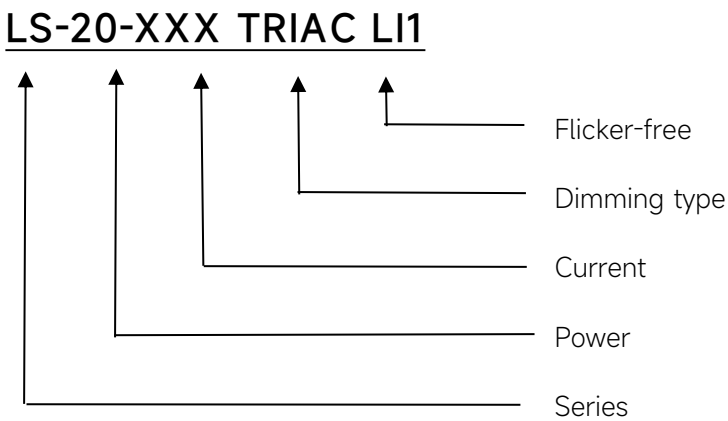

◆ Specification

Output	Constant Current (mA)	300	350	400	450	...	700
	Voltage Range(VDC)	50-68	40-60	28-40		...	20-30
	Unload voltage Max.	90VDC	80VDC	59VDC			
	Current Accuracy	±5%@220-240V					
	Output HF current ripple(≥1KHz)	±5%					
	Output LF current ripple(≤120Hz)	±5%					
	SVM	≤0.4					
	Pst	≤1					
	Efficiency(Typ.)	85%@Full load,230V					
Input	Rated input voltage	220-240VAC					
	Range of input voltage	198-264VAC					
	Maximum voltage	300VAC@1 h maximum,unit might not operate in this abnormal condition					
	Frequency(Hz)	50/60 Hz					
	Displacement factor	≥0.9					
	Power Factor	0.95					
	Input Current max (mA)	0.15A					
	Start-up time	＜0.5S					
	No Load Power	≤0.5W					
	THD (Typ.)	<20%					
Dimming	Dimming	YES					
	Dimming mode	Triac，Leading edge & trailing edge dimmable					
	Dimming depth	10%@220-240V					
	Dimming current range	10 ~ 100%					
Protection	Over Load Protection	103-130%					
		YES/Auto Resume					
	Over Voltage Protection	90VDC	80VDC	59VDC			
		YES/Auto Resume					
	Short circuit Protection	YES/Auto Resume					
capability	Surge capability (L-N)	1KV					
	Surge capability (L/N-Ground)	NA					
Environment	Operating Temperature	-20℃~+50℃					
	Humidity	20%-90%RH					
	Tc	85℃					
	Storage Temperature	-25℃~+60℃					
	Life time	＞50000h@Tc=75℃					
	Ripple&Noise	≤30dB(A)@20cm					
Surface	Dimension	102 x38.2 x 25mm					
	material	PC					

Standards	Safety	GB19510. 1, GB19510. 14;IEC61347- 1, IEC61347-2- 13;EN61347- 1, EN61347-2-13; EN62384
	EMC	GB/T17743, GB17625. 1;EN55015, EN61000-3-2, EN61000-3-3, EN61547;EN61000-4-5;EN61000-4-2,3,4,5,6,8,11, EN61547
	Energy Efficiency	Erp2.0 EU 2019/2020
	RoHS	RoHS (2011/65/EU) (EU)2015/863
Note	1.All parameters not specially mentioned are measured at 230VAC input , full load and 25℃ of ambient temperature. 2.Ripple & Noise are measured at 20MHz of bandwidth by using a 300mm twisted pair-wire terminated with a 0.1uF & 47 uF parallel capacitor. 3.The over-temperature protection of the product is provided by the IC. 4.All Eaglerise power supply are complied with EMI regulations. Since they are belong to component and will be installed inside system enclosure. When they are integrated into a system, the EMI characteristics of the system must be re-verified again.	

◆ Model list

Number	Model number	Output			
		Current (mA)	Voltage (VDC)	Voltage No load (VDC)	Power (W)
1	LS-20-300 TRIAC LI1	300	50-68	90	20.4
2	LS-20-350 TRIAC LI1	350	40-60	80	21
3	LS-20-400 TRIAC LI1	400	28-40	59	16
4	LS-20-450 TRIAC LI1	450	28-40		18
5	LS-20-500 TRIAC LI1	500	28-40		20
6	LS-20-550 TRIAC LI1	550	28-38		20
7	LS-20-600 TRIAC LI1	600	22-34		20.4
8	LS-20-650 TRIAC LI1	650	20-30		19.5
9	LS-20-700 TRIAC LI1	700	20-30		21

◆ Inrush Current

I_{peak}	Twidth	B10	B16	B20	C10	C16	C20
2.4A	45.6μs	53pcs	85pcs	106pcs	53pcs	85pcs	106pcs

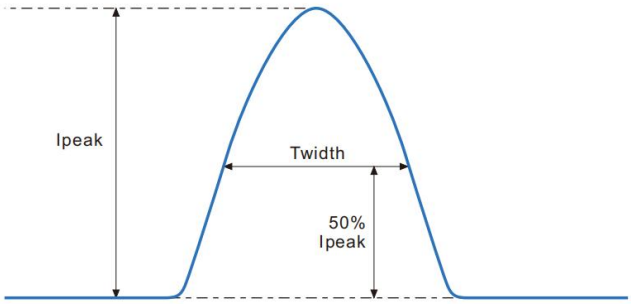

Remarks:

1.The number of drives mounted under different MCBs in the table is the maximum value. Please do not exceed this number during installation.

2.Different brands and models of miniature circuit breakers, the number of drives mounted will be slightly different.

◆ Wiring diagram

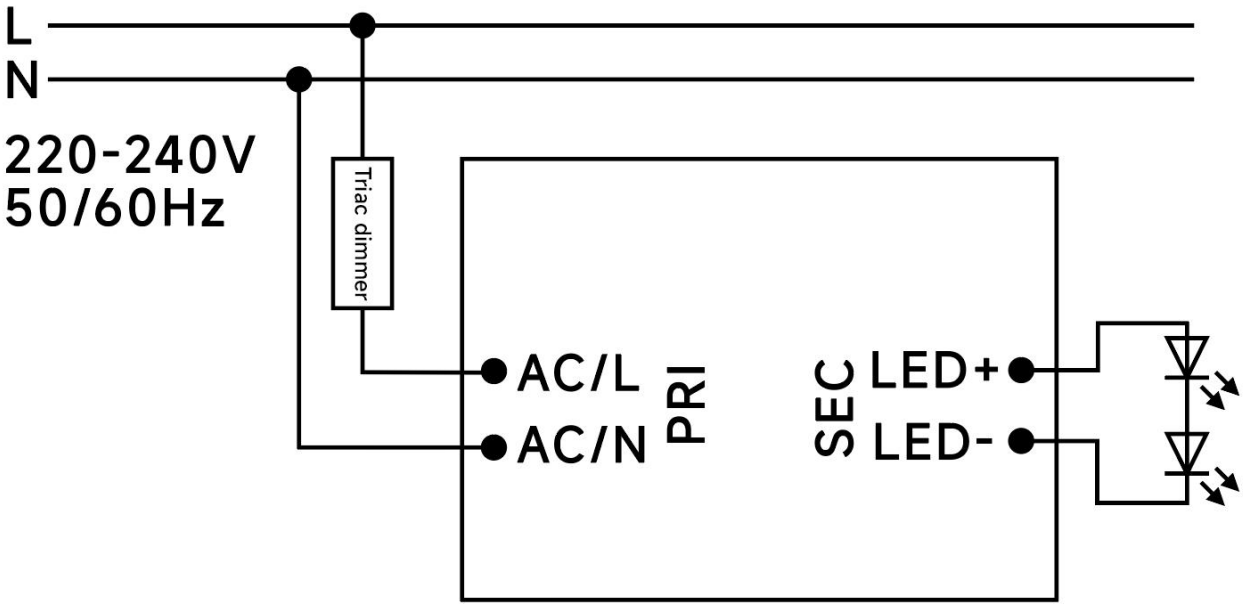

◆ 2D diagram

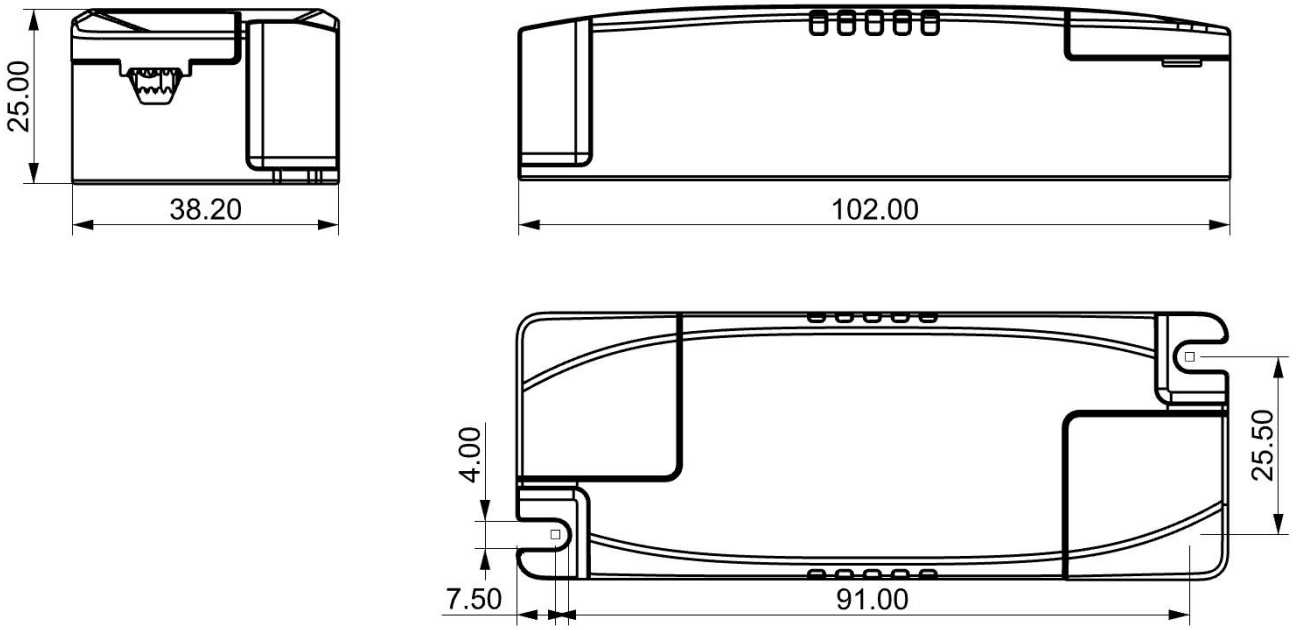

Terminal

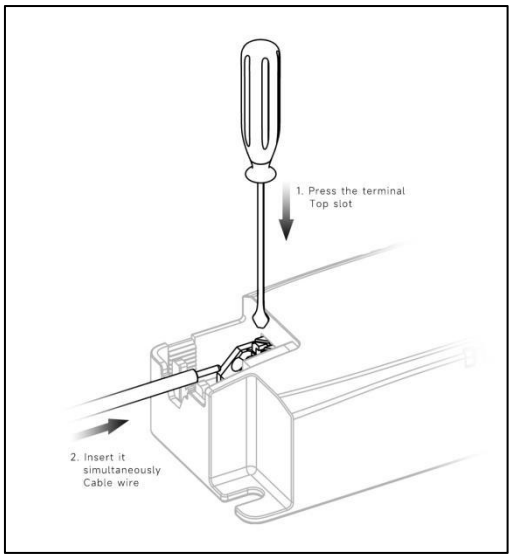

◆ Wiring & Connections

Specification item		Value （Unit ）
Input	Input wire cross-section	0.5...1.5 mm^2
	Input wire gauge.	16...20 AWG
	Input wire strip length	7...9mm
Output	Output wire cross-section	0.5...1.5 mm^2
	Output wire gauge.	16...20 AWG
	Output wire strip length	7...9mm

◆ Recommended wire

Wire cross-section	Wire type
2*0.5mm^2	H03VVH2-F 2core
2*0.75mm^2	H03VVH2-F 2core
1.5mm^2	CCC 08(RV-90)
16AWG(1.25mm^2)	UL1015

Note:Solid wire is risky to use on an angled terminal.Stranded wire is recommended for this kind of use.

◆ Packaging

Model	Product Dimensions(mm)	weight/piece	Outer carton dimension(mm)	Quantity/carton	Net weight/carton(Kg)	Gross weight/carton(Kg)
LS-20-XXX TRIAC LI1	102x38.2x25	0.073	Inside:370X275X215 Outside:385X285X225	150	10.95	12.54

◆ Curve for LS-20-XXX TRIAC LI1, Io=700mA

Lifetime vs. Temperature Curve

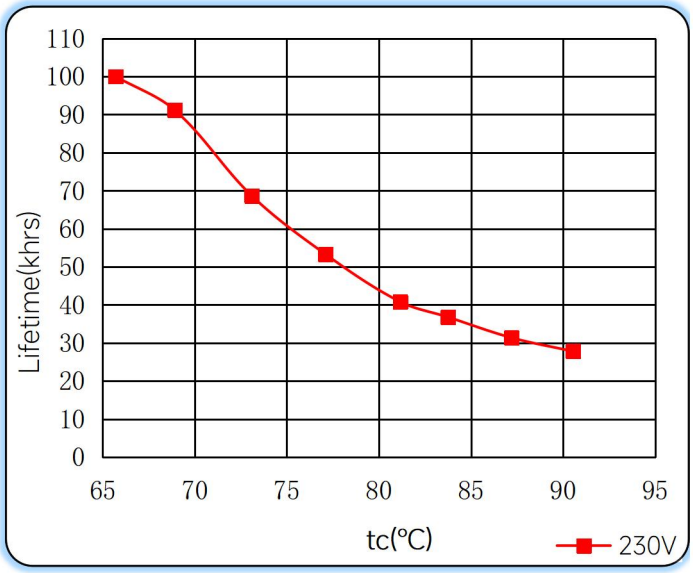

Efficiency vs. Load

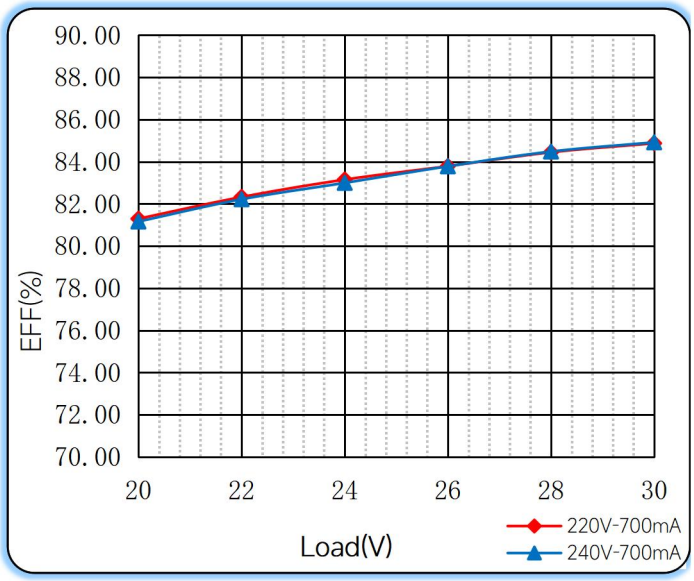

Power Factor Characteristics

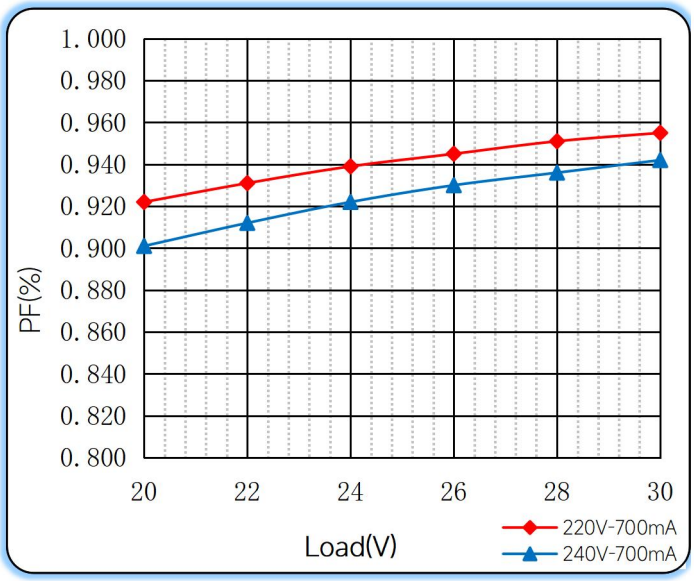

THD vs. Load

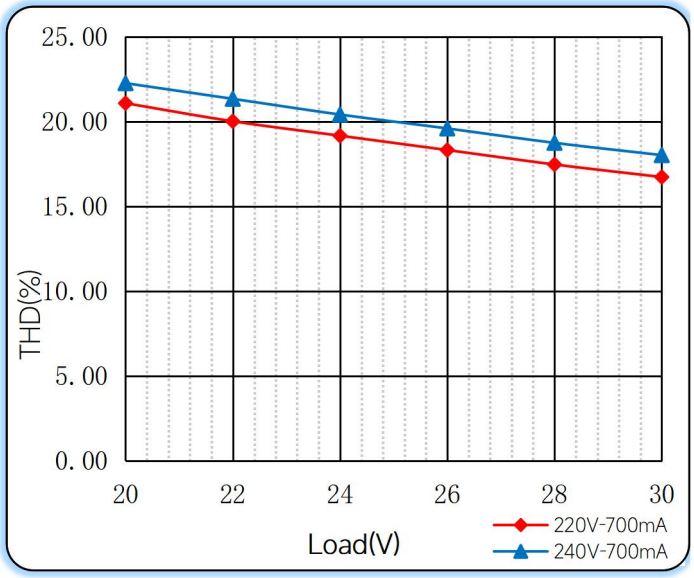

◆ Operating window

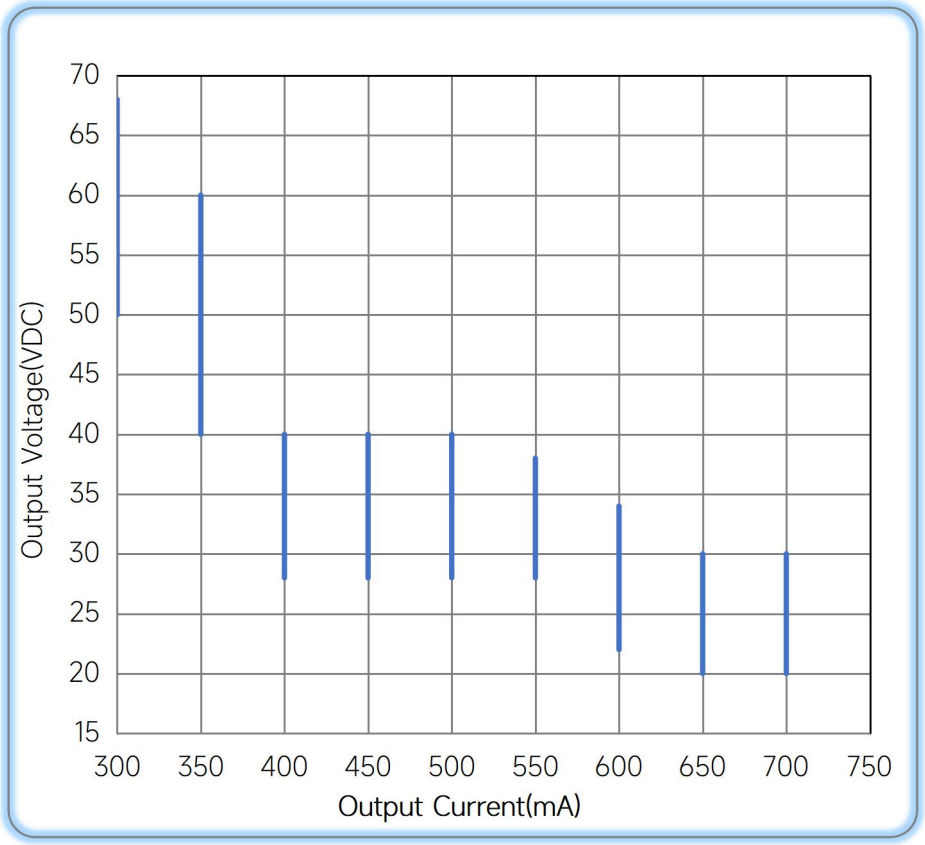

Operating window 100%

◆ Revision Updates

ITEM	BEFORE	AFTER	VERSION	DATE
Initial			A	2024/08/15
Unload voltage Max.	80V@300mA	90V@300mA	B	2025/05/10

Remark:The final interpretation of the contents of the specification belongs to Eaglerise Electric & Electronic (China) Co., Ltd.