21W Constant Current power supply

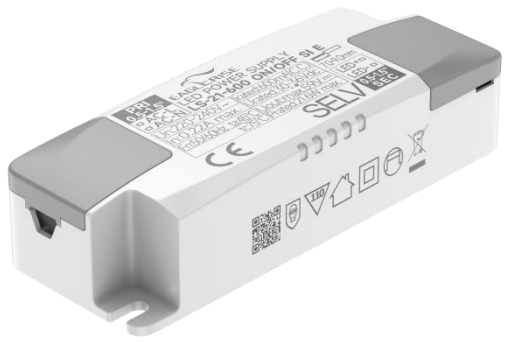

■**Approve**

CB CE SELV

Features

- For luminaries of protection Class II, SELV, Independent
- Input Voltage 220-240VAC
- Protections: OLP/OVP/SCP/OTP
- Power Factor: 0.6
- Efficiency: >86%
- 5 years warranty

Applications

- LED Panel
- Ceiling Light

◆ Description

LS-21-XXX ON/OFF SI E is a 21W constant current LED driver with 400 to 700mA output current and a forward voltage range from 30 to 42Vdc.With it's compact dimensions from 92 x 36 x 25 mm.It is easy to integrate in LED panel and Ceiling lights. To ensure trouble-free operation, protection is provided against output short circuit, over load, over voltage,over temperature .

◆ Model code

LS-21-XXX ON/OFF SI E

- Flicker-free
- Dimming type
- Current
- Power
- Series

◆ Specification

Output	Constant Current	400	450	500	550	600	700
	Voltage Range	30-42V			30-38V	30-36V	22-30V
	Unload voltage Max.	59VDC					
	Current Accuracy	±5%					
	Output HF current ripple(≥	±5%					
	Output LF current ripple(≤	±5%					
	SVM	≤0.4@Full Load					
	Pst	≤1@Full Load					
	Efficiency(Typ.)	>86%@Full Load,230VAC					
Input	Rated input voltage	220-240VAC					
	Range of input voltage	198-264VAC					
	Frequency(Hz)	50/60 Hz					
	Power Factor	0.6@Full Load，230VAC					
	Input Current max	0.18A	0.19A	0.20A	0.21A	0.22A	0.21A
	Start-up time	＜0.5S					
	No Load Power	≤0.5W					
Protection	Over Load Protection	103-120%					
		YES/Auto Resume					
	Over Voltage Protection	59VDC					
		YES/Auto Resume					
	Short circuit Protection	YES/Auto Resume					
capability	Surge capability (L-N)	1KV					
	Surge capability	NA					
Environment	Operating Temperature	-20℃~+45℃					
	Humidity	20%-90%RH					
	Tc（Max)	75℃					
	Storage Temperature	-20℃...+60℃					
	Life time	＞30000h@Tc=75℃					
	Noise	≤25dB(A)@20cm					
Dimming	Three-level Dimming	100%-50%-12%(with memory function)					
Surface	Dimension	92x36x25(LXWXH)mm					
	material	PC					
Standards	Safety	GB19510. 1, GB19510. 14;IEC61347- 1, IEC61347-2- 13;AS/NZS 61347- 1					
	EMC	GB/T17743, GB17625. 1;EN55015, EN61000-3-2, EN61000-3-3, EN61547;EN55015, EN61000-3-2, EN61000-3-3, EN61547,EN 62493;EN61000-4-5;EN61000-4-2,3,4,5,6,8,11, EN61547					
	Energy Efficiency	Erp2.0 EU 2019/2020					

	RoHS	RoHS (2011/65/EU) (EU)2015/863
Note	1.All parameters not specially mentioned are measured at 230VAC input , full load and 25℃ of ambient temperature. 2.Ripple & Noise are measured at 20MHz of bandwidth by using a 300mm twisted pair-wire terminated with a 0.1uF & 47 uF parallel capacitor. 3.The over-temperature protection of the product is provided by the IC. 3.At 600mA, within 36V, the harmonic standards can be met and the load range can reach up to 38V. 4.All Eaglerise power supply are complied with EMI regulations. Since they are belong to component and will be installed inside system enclosure. When they are integrated into a system, the EMI characteristics of the system must be re-verified again.	

◆ Model list

Number	Model number	Output			
		Current (mA)	Voltage (VDC)	Voltage No load (VDC)	Power (W)
1	LS-21-400 ON/OFF SI E	400	30-42	59	16.8
2	LS-21-450 ON/OFF SI E	450			18.9
3	LS-21-500 ON/OFF SI E	500			21
4	LS-21-550 ON/OFF SI E	550	30-38		20.9
5	LS-21-600 ON/OFF SI E	600	30-36		21.6
6	LS-21-700 ON/OFF SI E	700	22-30		21

◆ Inrush Current

I_{peak}	T_{width}	B10	B16	B20	C10	C16	C20
12.3A	112μs	38pcs	60pcs	76pcs	38pcs	60pcs	76pcs

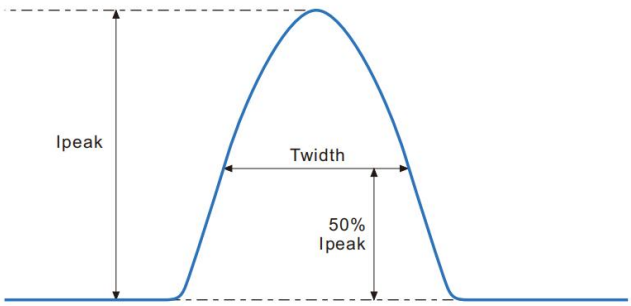

Remarks:
1.The number of drives mounted under different MCBs in the table is the maximum value. Please do not exceed this number during installation.
2.Different brands and models of miniature circuit breakers, the number of drives mounted will be slightly different.

◆ Wiring diagram

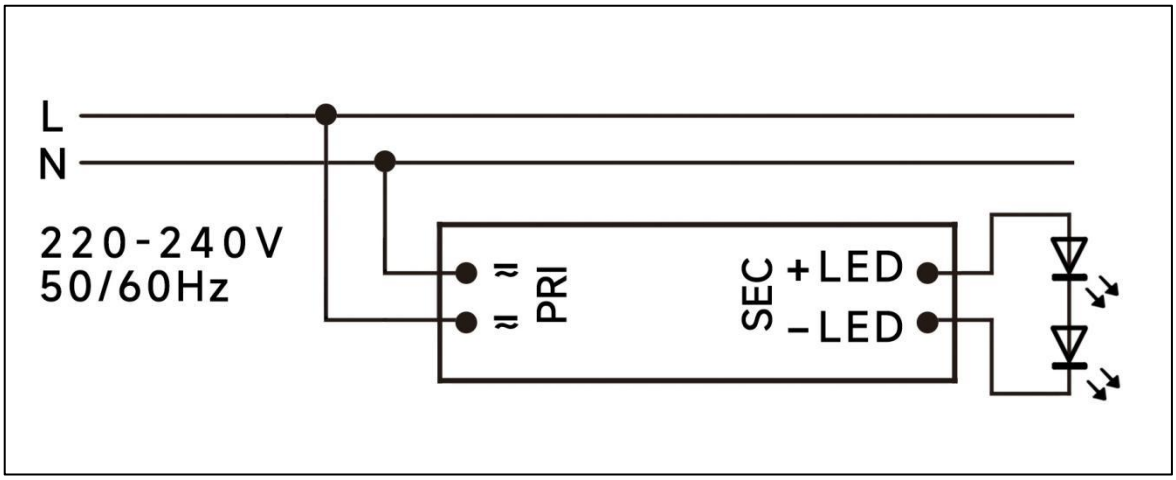

◆ 2D diagram

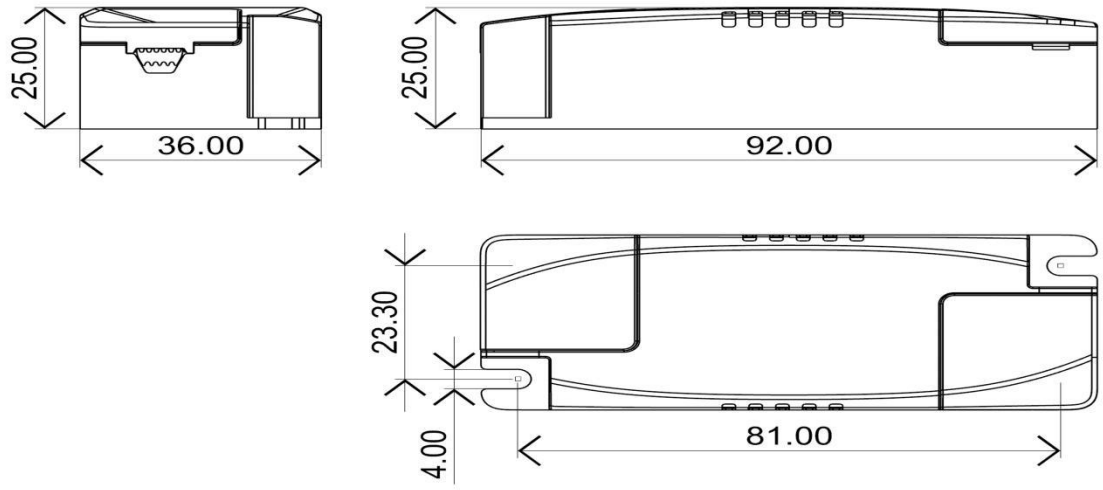

◆ Wiring & Connections

Specification item		Value （Unit ）
Input	Input wire cross-section	0.5...1.5 mm^2
	Input wire gauge.	16...20 AWG
	Input wire strip length	7...9mm
Output	Output wire cross-section	0.5...1.5 mm^2
	Output wire gauge.	16...20 AWG
	Output wire strip length	7...9mm

Note:Solid wire is risky to use on an angled terminal.Stranded wire is recommended for this kind of use.

◆ Packaging

Model	Product Dimensions(mm)	weight/piece	Outer carton dimension(mm)	Quantity/carton	Net weight/carton(Kg)	Gross weight/carton(Kg)
LS-21-XXX ON/OFF SIE	92x36x25	45	370X275X215	180	8.1	9.1

◆ Curve for LS-21-XXX ON/OFF SI E

Lifetime vs. Ambient Temperature Curve

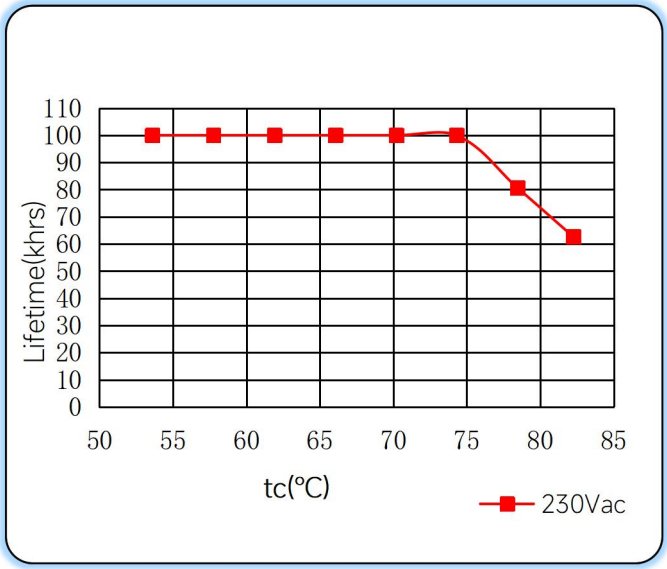

Efficiency vs. Load

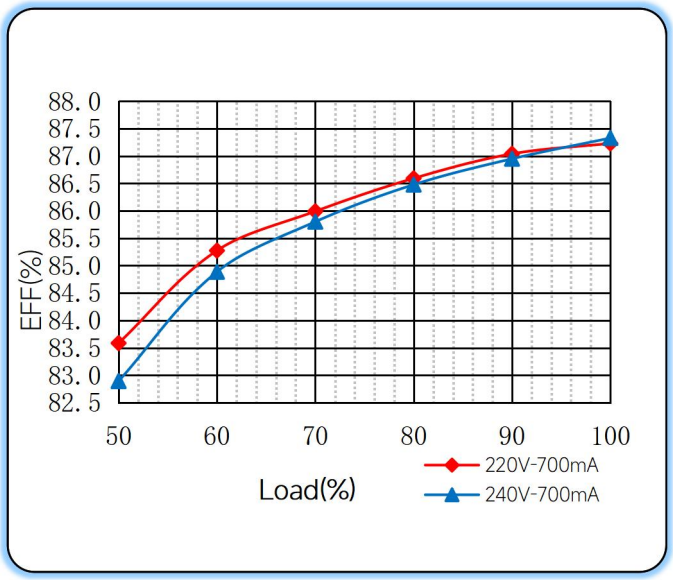

Power Factor Characteristics

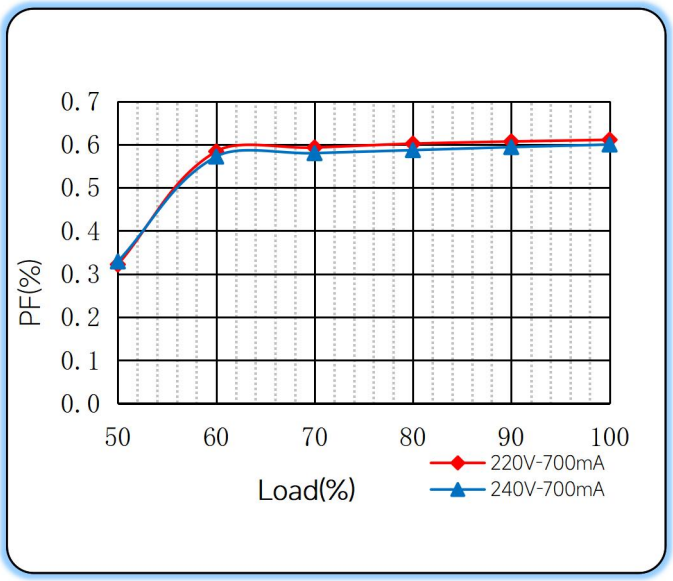

THD vs. Load

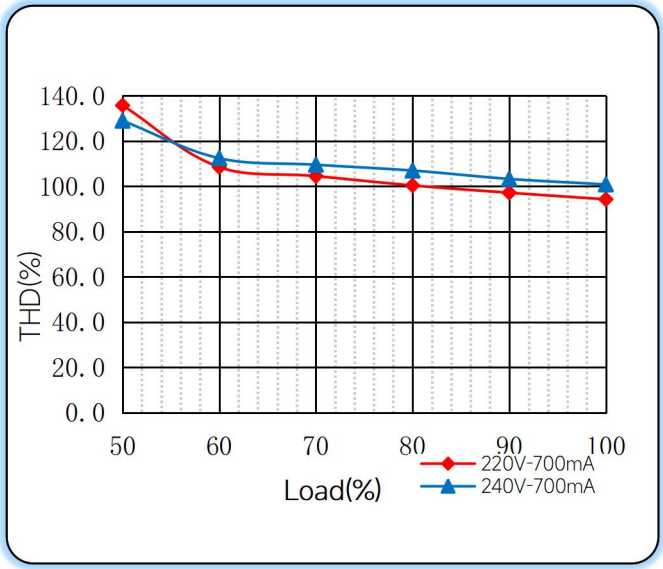

◆ Operation

Reset Mode— Power off and on twice within 1 second to reset.

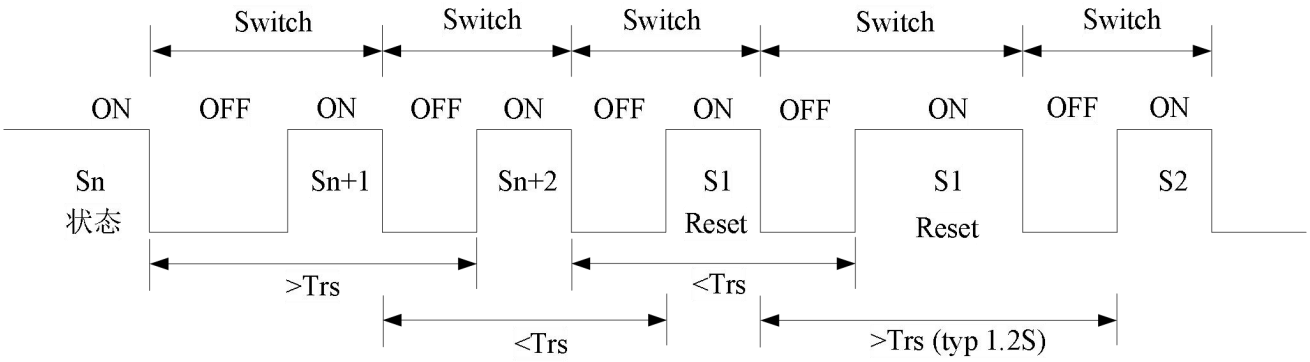

If shutdown takes ~6.4s or a reset ("OFF→ON→OFF") is executed in ~1.2s,a sync issue might arise.

However, given the ±5% time tolerance,the risk window is minimal, and the occurrence probability is negligible.

Signal Detection Requirements

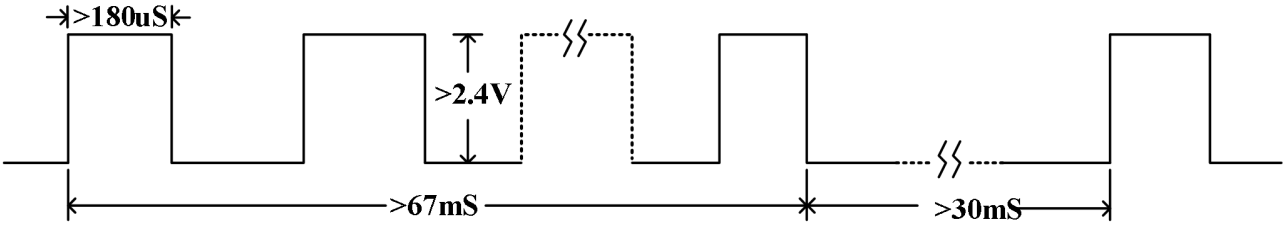

The S4165M determines power ON/OFF states by detecting pulse signals or high/low levels through the CLK pin. The pulse signal must meet the following requirements:

- Pulse width: >180 μs
- Pulse amplitude: >2.4V (AC signals detectable; for design margin, >4V recommended).

To suppress noise interference, the IC incorporates:

- Power-on delay T_{d(on)}: 67ms (typ. at room temp) to confirm ON state.
- Power-off delay T_{d(off)}: 30ms (typ. at room temp) to confirm OFF state.

State transition logic:

- Shutdown: Triggered only after detecting a valid CLK signal for >67ms.
- Power-on: Activated after >30ms of no valid CLK signal detection.

◆ Operating window

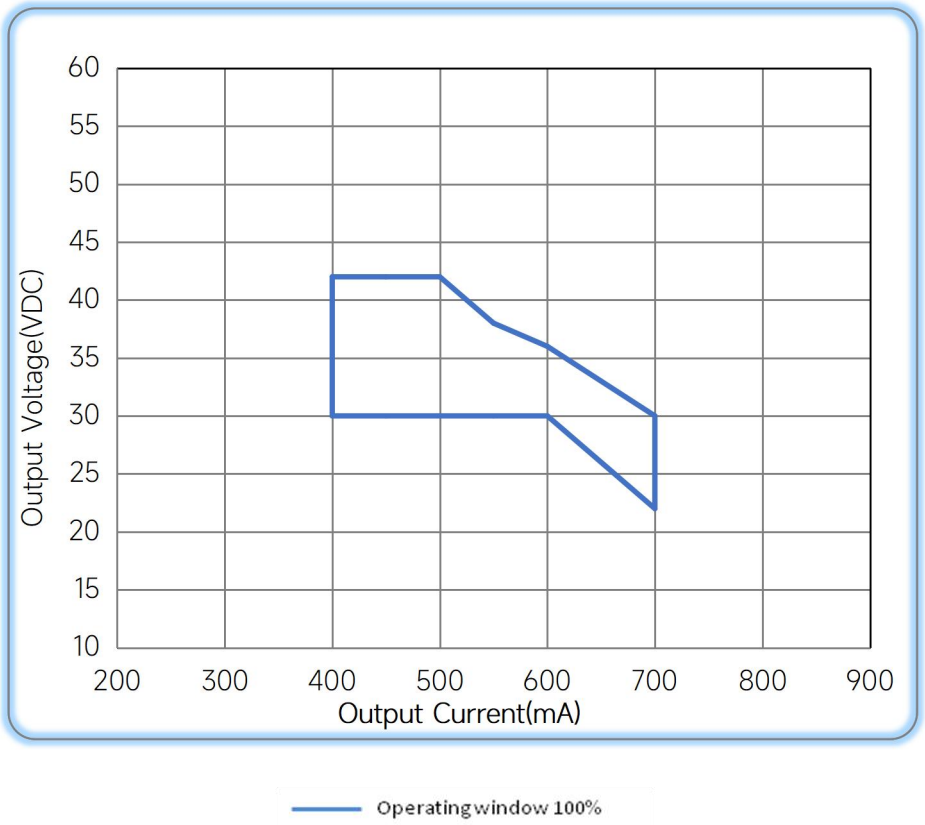

◆ Revision Updates

ITEM	BEFORE	AFTER	VERSION	DATE
Initial			A	2024/11/12
Noise	≤20dB(A)@10cm	≤25dB(A)@20cm	B	2025/05/13
Tc（Max)	80℃	75℃	B	2025/06/06

Remark:The final interpretation of the contents of the specification belongs to Eaglerise Electric & Electronic (China) Co., Ltd