250W constant Voltage-LS Series

Features

- For luminaries of protection Class II, SELV, Independent
- Input Voltage 220-240VAC
- Protections: SCP/OLP/OTP
- Power Factor: ≥0.95 (Typ.)
- Efficiency: ≥93% (Typ.)
- 5 years warranty

Applications

- LED strips

■Approve

◆ Description

LS-250-XX LI EXC is a 250W constant voltage LED driver that operates from 198-264Vac input with 24V or 48V output voltage. With it's compact dimensions from 318 X 45 X 30mm. It is easy to integrate in LED strips products. To ensure trouble-free operation, protection is provided against output short circuit and over Load.

◆ Model code

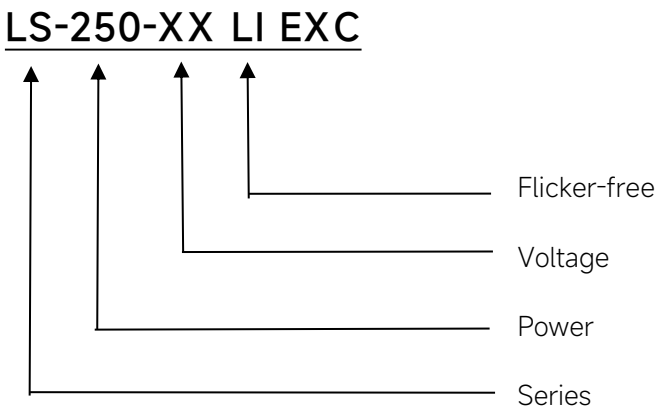

◆ Specification

Output	Constant Voltage	24VDC	48VDC
	Current Range	0-10.4A	0-5.2A
	Voltage Accuracy	±5%	
	Output HF current ripple(≥1KHz)	±5%	
	Output LF current ripple(≤120Hz)	±5%	
	SVM	≤0.4	
	Pst	≤1	
	Efficiency(Typ.)	≥93%@Full load,230V	
Input	Rated input voltage	220-240VAC	
	Range of input voltage	198-264VAC	
	Frequency(Hz)	50/60 Hz	
	Displacement factor	≥0.9	
	Power Factor	≥0.95@Full load,230V	
	Input Current max	1.5A	
	Start-up time	＜0.5S	
	No Load Power	≤0.5W	
	THD (Typ.)	＜10%@Full load,230V	
Protection	Over Load Protection	105-150%	
		YES/Auto Resume	
	Short circuit Protection	YES/Auto Resume	
	Over Temperature Protection	Ta≥60℃,@Full load	
		YES/Auto Resume	
capability	Surge capability (L-N)	1KV	
	Surge capability (L/N-Ground)	NA	
Environment	Operating Temperature	-20℃~+45℃	
	Humidity	20%-90%RH	
	Tc	85℃	
	Storage Temperature	-20℃~+60℃	
	Life time	＞50000h@Tc=85℃	
	Noise	≤25dB(A)@20cm	
Surface	Dimension	318x45x30(LXWXH)mm	
	material	PC	
Standards	Safety	GB19510. 1, GB19510. 14;IEC61347- 1, IEC61347-2- 13;EN61347- 1, EN61347-2-13;EN62384;	
	EMC	GB/T17743, GB17625. 1;EN55015, EN61000-3-2, EN61000-3-3, EN61547;EN61000-4-5;EN61000-4-2,3,4,5,6,8,11, EN61547	
	Energy Efficiency	Erp2.0 EU 2019/2020	

	RoHS	RoHS (2011/65/EU) (EU)2015/863
Note	1.All parameters NOT specially mentioned are measured at 240VAC input , full load and 25℃ of ambient temperature. 2.Ripple & Noise are measured at 20MHz of bandwidth by using a 300mm twisted pair-wire terminated with a 0.1uF & 47 uF parallel capacitor. 3.The efficiency testing will be affected by the instrument used and the results may also be different. 4.Only 90% of full load at 198V input. 5.EL compatible with IEC 61347-2-13 Annex J, compatible with EN 60598-2-22 emergency lighting fixtures, compatible with EN 50172 central battery system applications. 6.All Eaglerise power supply are complied with EMI regulations. Since they are belong to component and will be installed inside system enclosure. When they are integrated into a system, the EMI characteristics of the system must be re-verified again.	

◆ Inrush Current

I_{peak}	T_{width}	B10	B16	B20	C10	C16	C20
46.4A	680μs	2pcs	3pcs	4pcs	4pcs	6pcs	8pcs

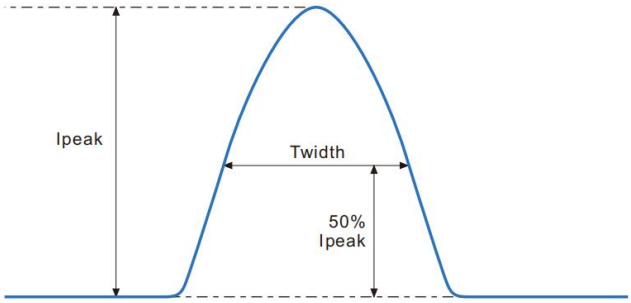

Remarks:
1.The number of drives mounted under different MCBs in the table is the maximum value. Please do not exceed this number during installation.
2.Different brands and models of miniature circuit breakers, the number of drives mounted will be slightly different.

◆ Wiring diagram

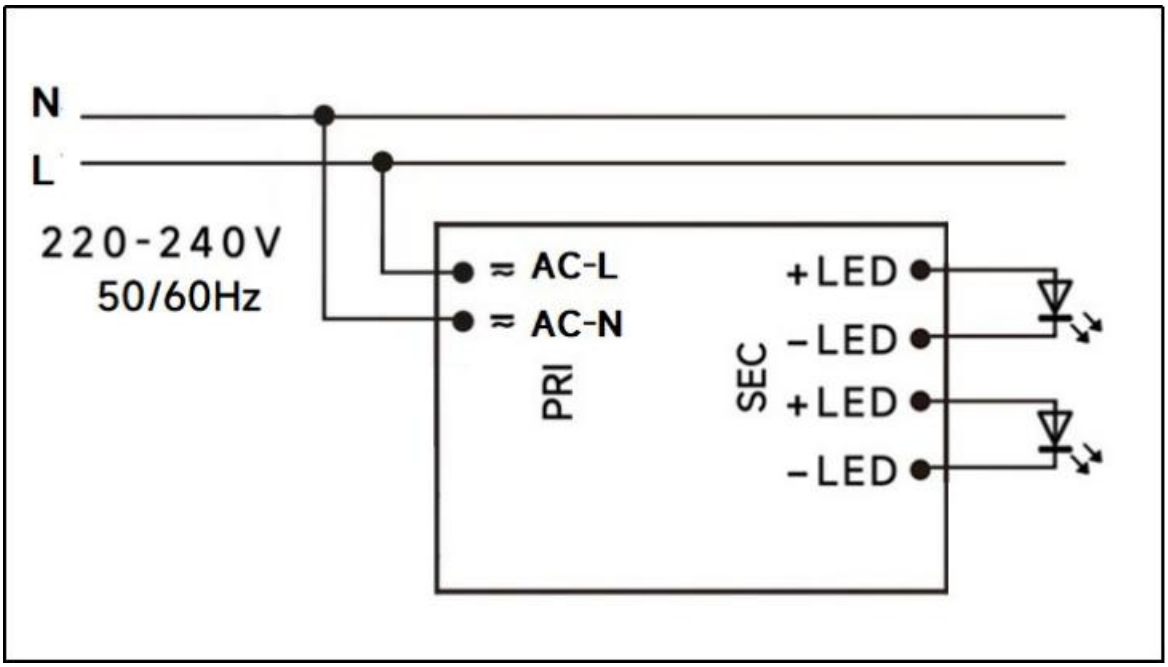

◆ 2D diagram

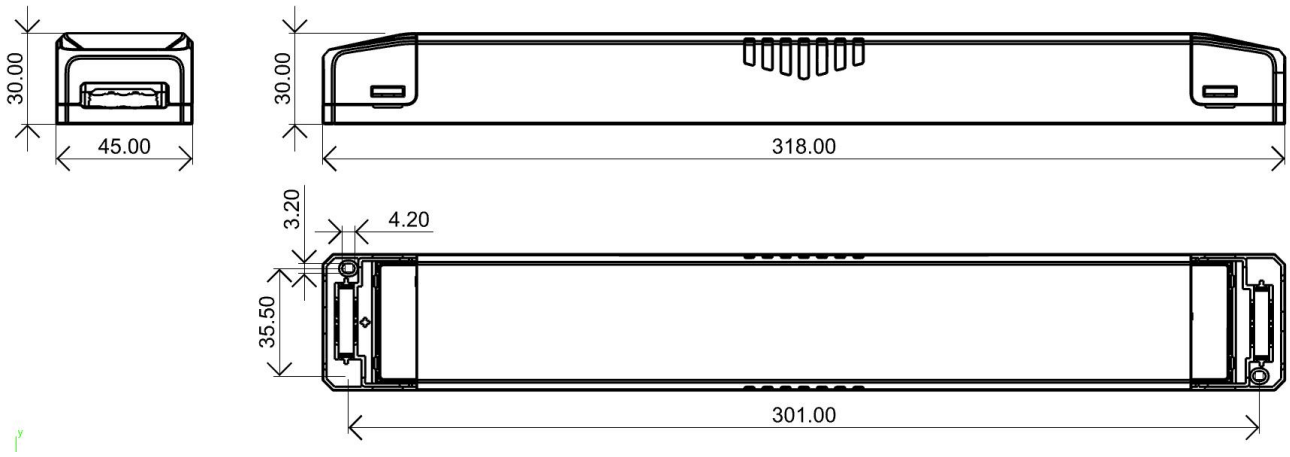

Terminal

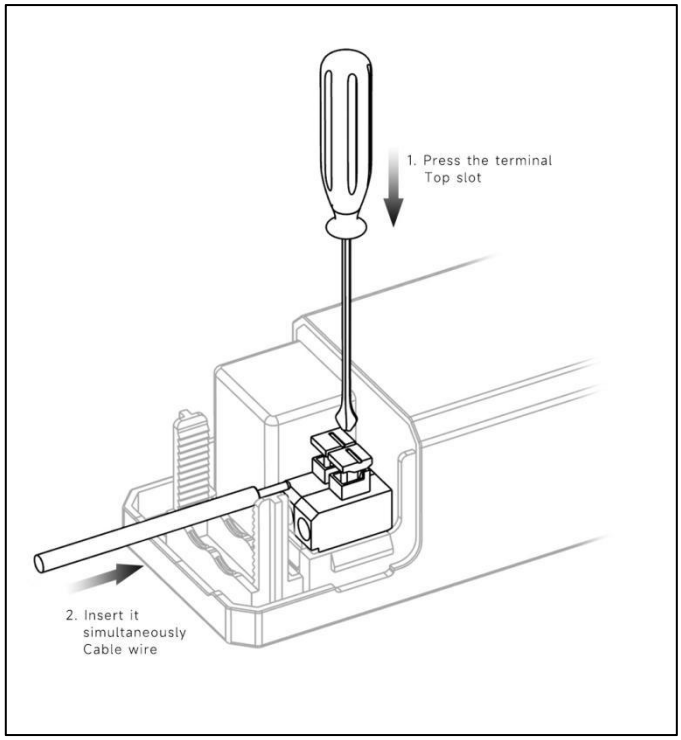

◆ Wiring & Connections

Specification item		Value （Unit ）
Input	Input wire cross-section	0.5...1.5 mm^2
	Input wire gauge.	16...20 AWG
	Input wire strip length	7...9mm
Output	Output wire cross-section	0.5...1.5 mm^2
	Output wire gauge.	16...20 AWG
	Output wire strip length	7...9mm

Note:Solid wire is risky to use on an angled terminal.Stranded wire is recommended for this kind of use.

◆ Curve for LS-250-24 LI EXC

Lifetime vs. Temperature Curve

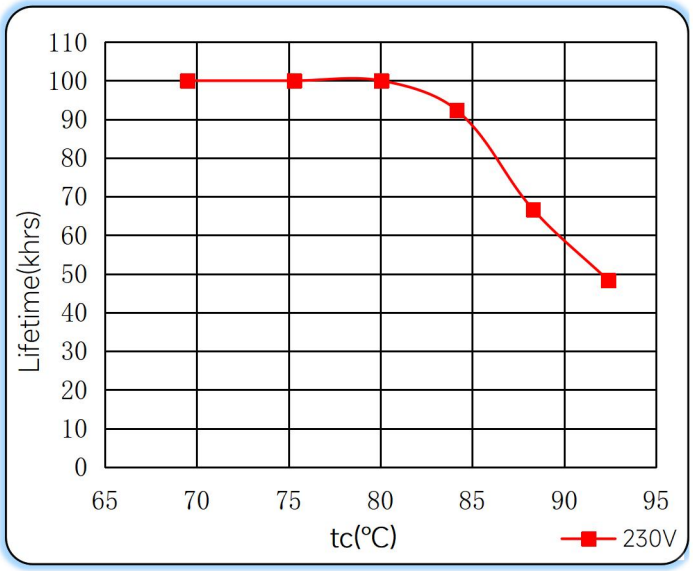

Efficiency vs. Load

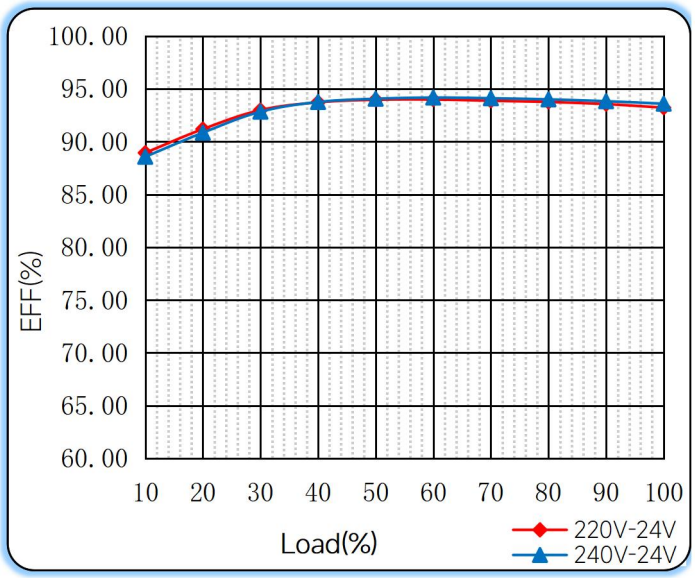

Power Factor Characteristics

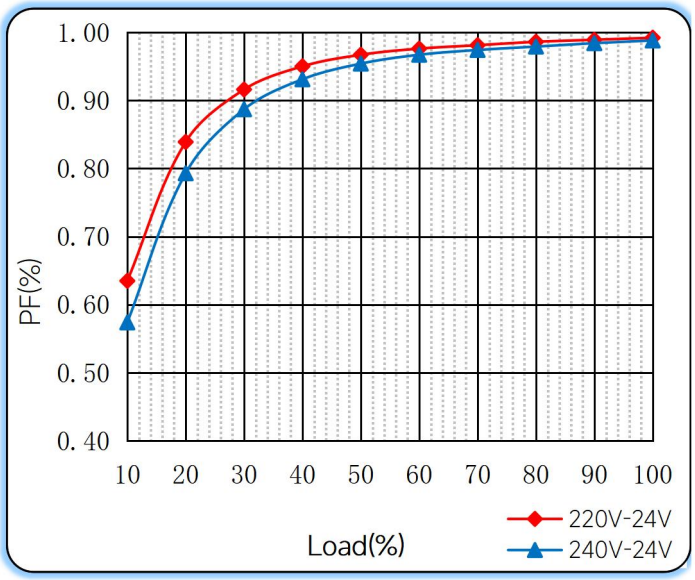

THD vs. Load

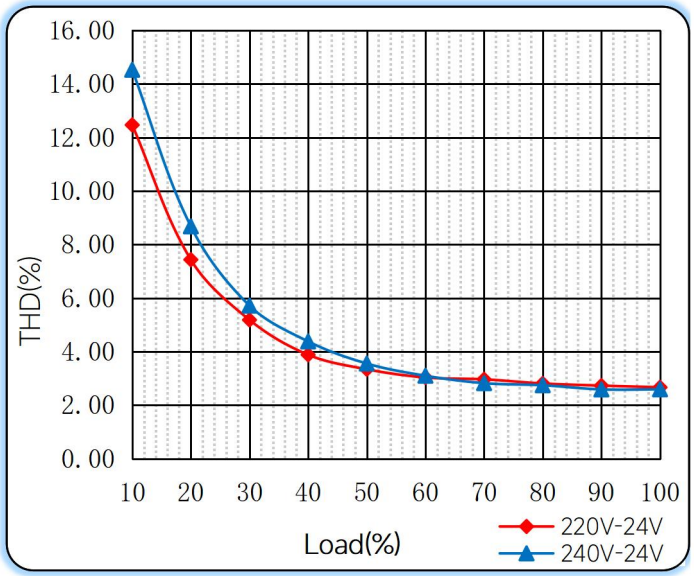

◆ Derating curve

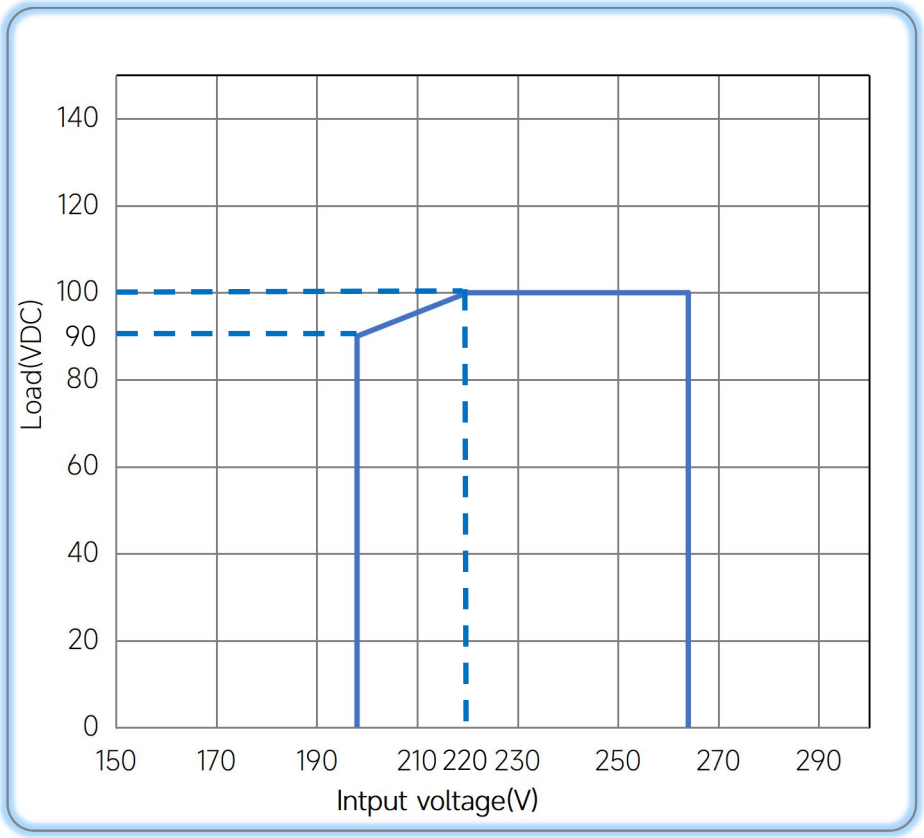

◆ Operating window

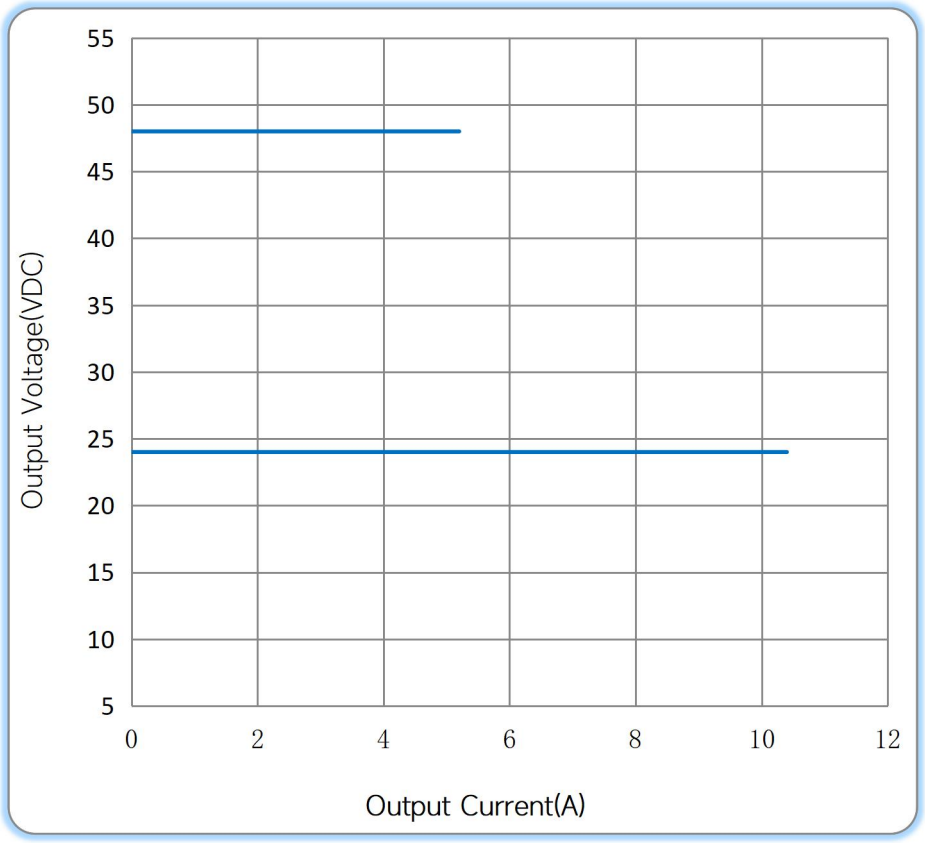

Operating window 100%

◆ Revision Updates

ITEM	BEFORE	AFTER	VERSION	DATE
Initial			A	2024/03/02
Tc/THD	90°C/15%	85°C/10%	B	2024/11/18
Wiring diagram		Update	C	2025/11/20

Remark:The final interpretation of the contents of the specification belongs to Eaglerise Electric & Electronic (China) Co., Ltd.