# 30W constant Voltage-LS Series

Features

- Class II，SELV，Independent
- Input Voltage 220-240VAC
- Protections: SCP/OLP/OVP/OTP
- Power Factor：≥0.95（Typ.）
- Efficiency：≥85%（Typ.）
- 5 years warranty

Applications

- LED strips

■Approve

CE CB EN CCC SELV EL

## ◆ Description

LS-30-XX LI EXC is a 30W constant voltage LED driver that operates from 198-264Vac input with 12V or 24V output voltage. With it's compact dimensions from 136 x 38 x 28 mm. It is easy to integrate in LED strips products. To ensure trouble-free operation, protection is provided against output short circuit and over Load.

## ◆ Model code

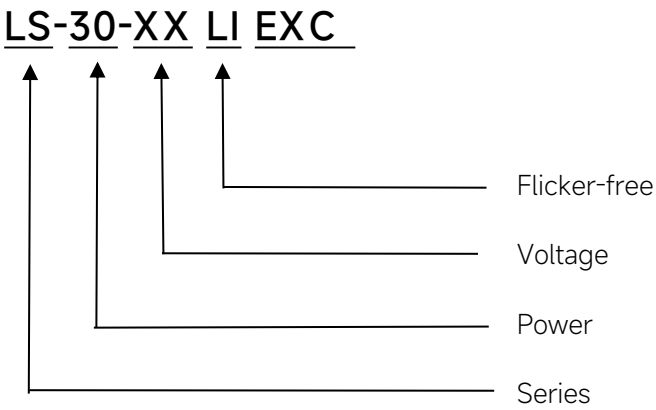

## ◆ Specification

| | | | |
|---|---|---|---|
| Output | Constant Voltage | 12VDC | 24VDC |
| | Current Range | 0-2.5A | 0-1.25A |
| | Voltage Accuracy | ±5% | |
| | Output HF current ripple(≥1KHz) | ±1% | |
| | Output LF current ripple(≤120Hz) | ±1% | |
| | SVM | ≤0.4 | |
| | Pst | ≤1 | |
| | Efficiency(Typ.) | ≥85%@Full load,230V | |
| Input | Rated input voltage | 220-240V | |
| | Range of input voltage | 198-264VAC | |
| | Range input voltage(VDC) | 176-280VDC | |
| | Frequency(Hz) | 0/50/60 Hz | |
| | Displacement factor | ≥0.95 | |
| | Power Factor | ≥0.95 | |
| | Input Current max | 0.20A | |
| | Start-up time | ＜0.5S | |
| | No Load Power | ≤0.5W | |
| | THD (Typ.) | ＜10% | |
| Protection | Over Load Protection | 105-150% | |
| | | YES/Auto Resume | |
| | Over Voltage Protection | ＞12.6VDC | ＞25.2VDC |
| | | YES/Auto Resume | |
| | Short circuit Protection | YES/Auto Resume | |
| | Over Temperature Protection | YES/Auto Resume | |
| capability | Surge capability (L-N) | 1KV | |
| | Surge capability (L/N-Ground) | 2KV | |
| Environment | Operating Temperature | -20℃~+45℃ | |
| | Humidity | 20%-90%RH | |
| | Tc | 75℃ | |
| | Storage Temperature | -20℃~+60℃ | |
| | Life time | ＞50000h@Tc=75℃ | |
| | Ripple & Noise | ≤20dB(A)@20cm | |
| Surface | Dimension | 136X38X28(LXWXH)mm | |
| | material | PC | |
| Standards | Safety | GB19510. 1, GB19510. 14;IEC61347- 1, IEC61347-2- 13;EN61347- 1, EN61347-2-13;EN62384; | |
| | EMC | GB/T17743, GB17625. 1;EN55015, EN61000-3-2, EN61000-3-3, EN61547;EN61000-4-5;EN61000-4-2,3,4,5,6,8,11, EN61547 | |

| | | |
|---|---|---|
| | Energy Efficiency | Erp2.0 EU 2019/2020 |
| | RoHS | RoHS (2011/65/EU) (EU)2015/863 |
| Note | 1.All parameters NOT specially mentioned are measured at 240VAC input , full load and 25℃ of ambient temperature.<br>2.Ripple & Noise are measured at 20MHz of bandwidth by using a 300mm twisted pair-wire terminated with a 0.1uF & 47 uF parallel capacitor.<br>3.EL compatible with IEC 61347-2-13 Annex J, compatible with EN 60598-2-22 emergency lighting fixtures, compatible with EN 50172 central battery system applications.<br>4.All Eaglerise power supply are complied with EMI regulations. Since they are belong to component and will be installed inside system enclosure. When they are integrated into a system, the EMI characteristics of the system must be re-verified again. | |

## ◆ Inrush Current

| $I^{peak}$ | Twidth | B10 | B16 | B20 | C10 | C16 | C20 |
|---|---|---|---|---|---|---|---|
| 18.6A | **144μs** | 31pcs | 49pcs | 62pcs | 40pcs | 64pcs | 80pcs |

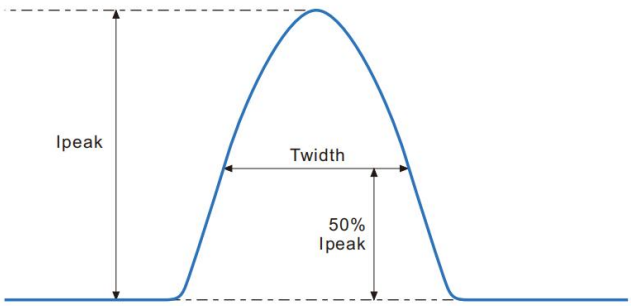


Remarks:
1.The number of drives mounted under different MCBs in the table is the maximum value. Please do not exceed this number during installation.
2.Different brands and models of miniature circuit breakers, the number of drives mounted will be slightly different.

## ◆ Wiring diagram

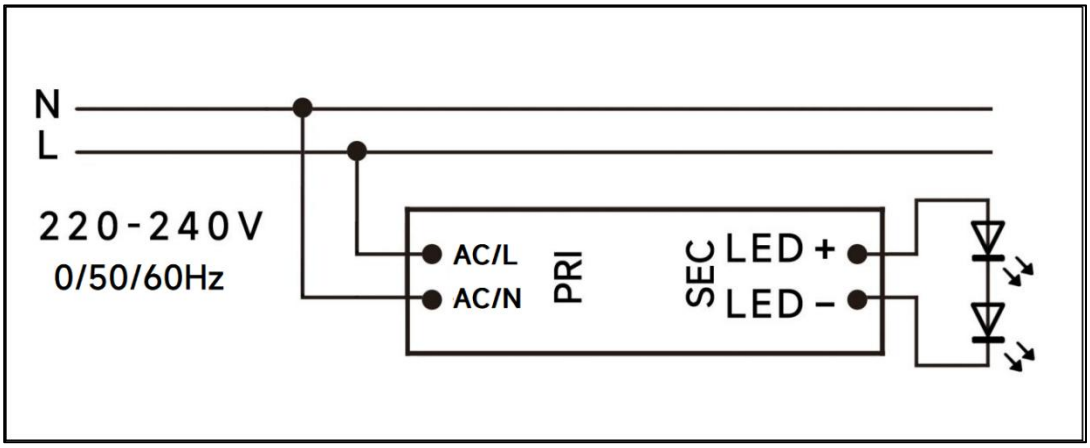
N
L
220-240V
0/50/60Hz
AC/L
AC/N
PRI
SEC
LED +
LED –

## ◆ 2D diagram

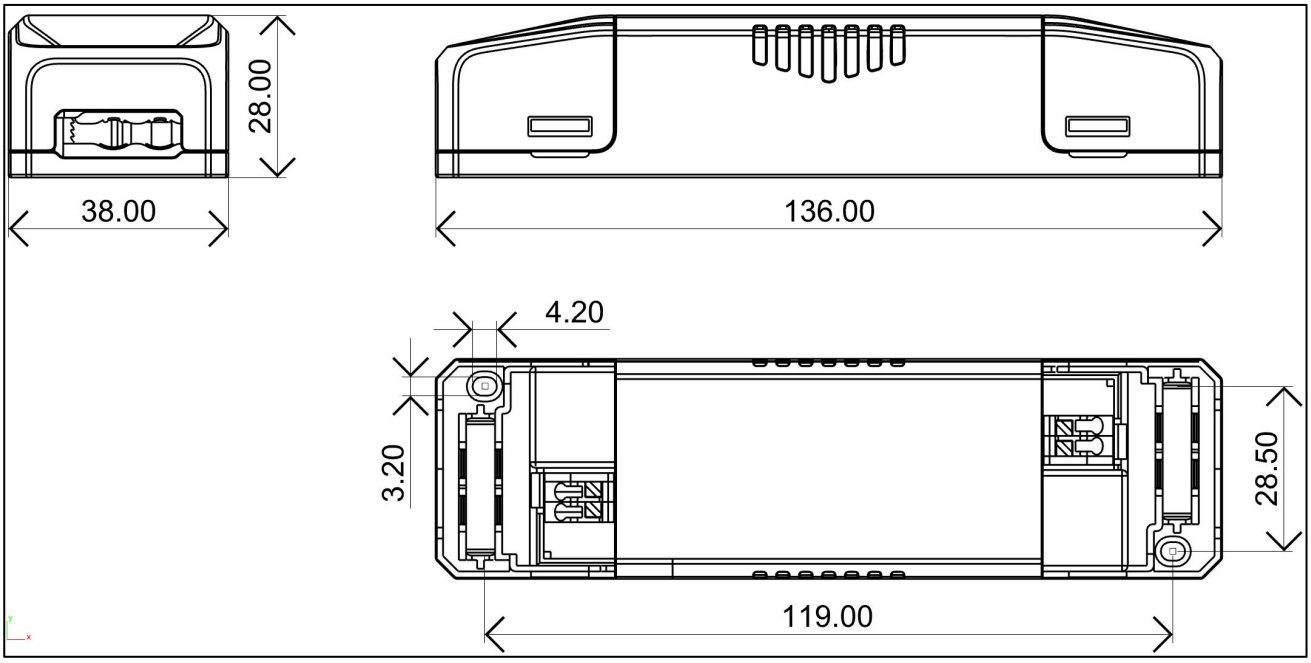


## Termina

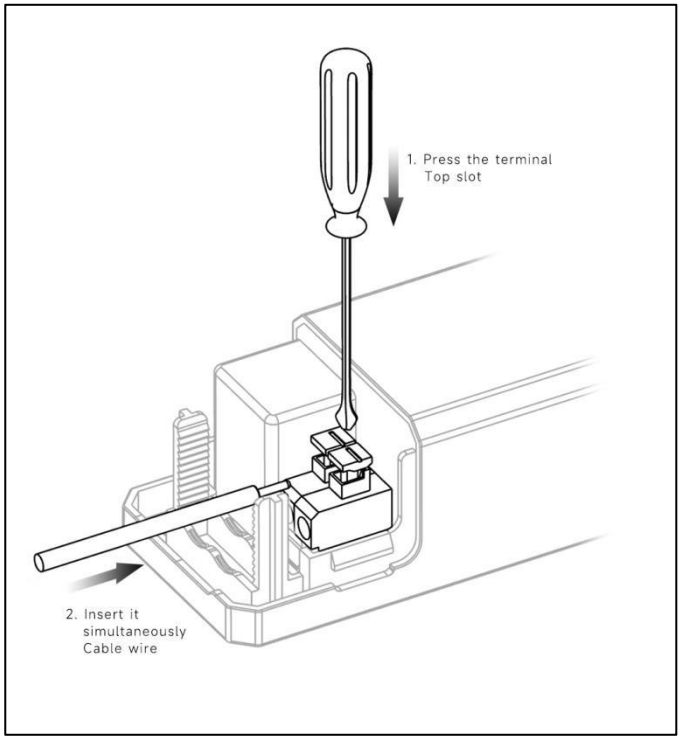

## ◆ Wiring & Connections

| Specification item | | Value （Unit ） |
|---|---|---|
| Input | Input wire cross-section | 0.5...1.5 $mm^2$ |
| | Input wire gauge. | 16...20 AWG |
| | Input wire strip length | 7...9mm |
| Output | Output wire cross-section | 0.5...1.5 $mm^2$ |
| | Output wire gauge. | 16...20 AWG |
| | Output wire strip length | 7...9mm |

## ◆ Curve for LS-30-12 LI EXC

### Lifetime vs. Temperature Curve

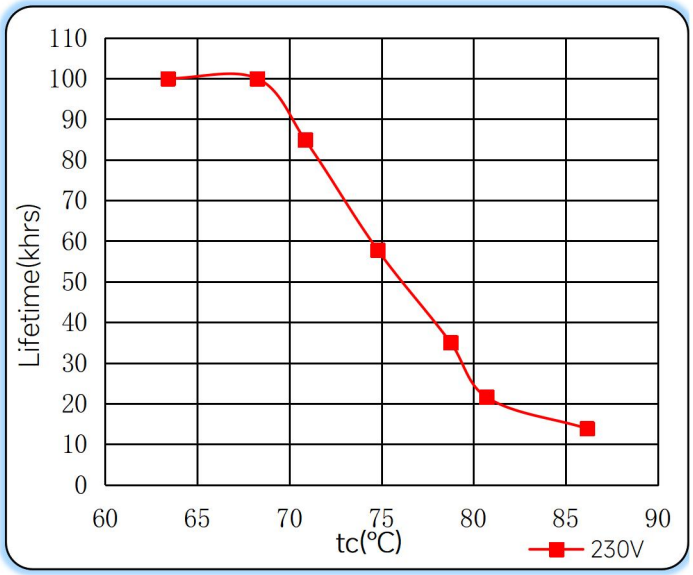


### Efficiency vs. Load

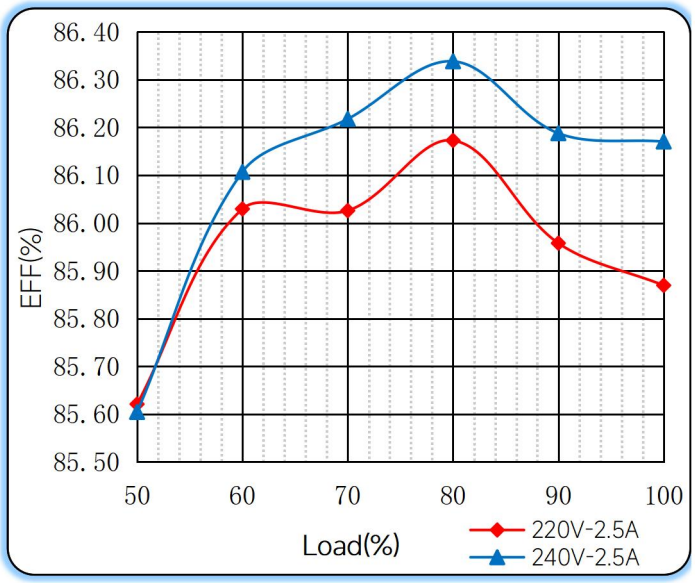


### Power Factor Characteristics

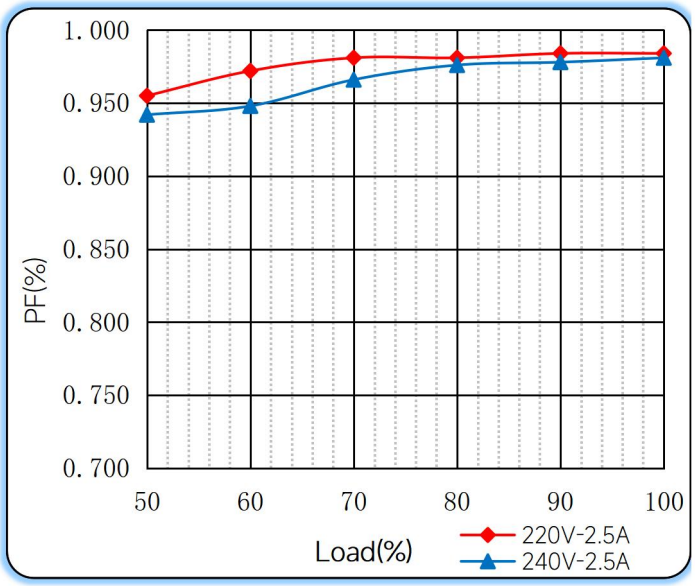


### THD vs. Load

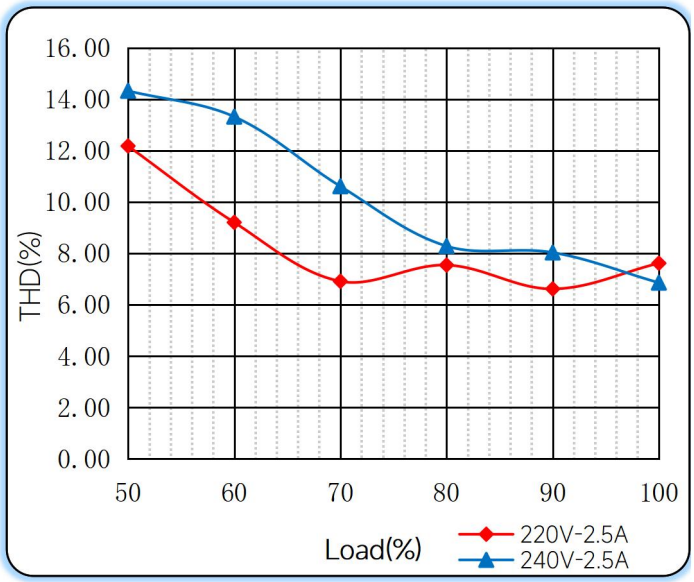

## ◆ Operating window

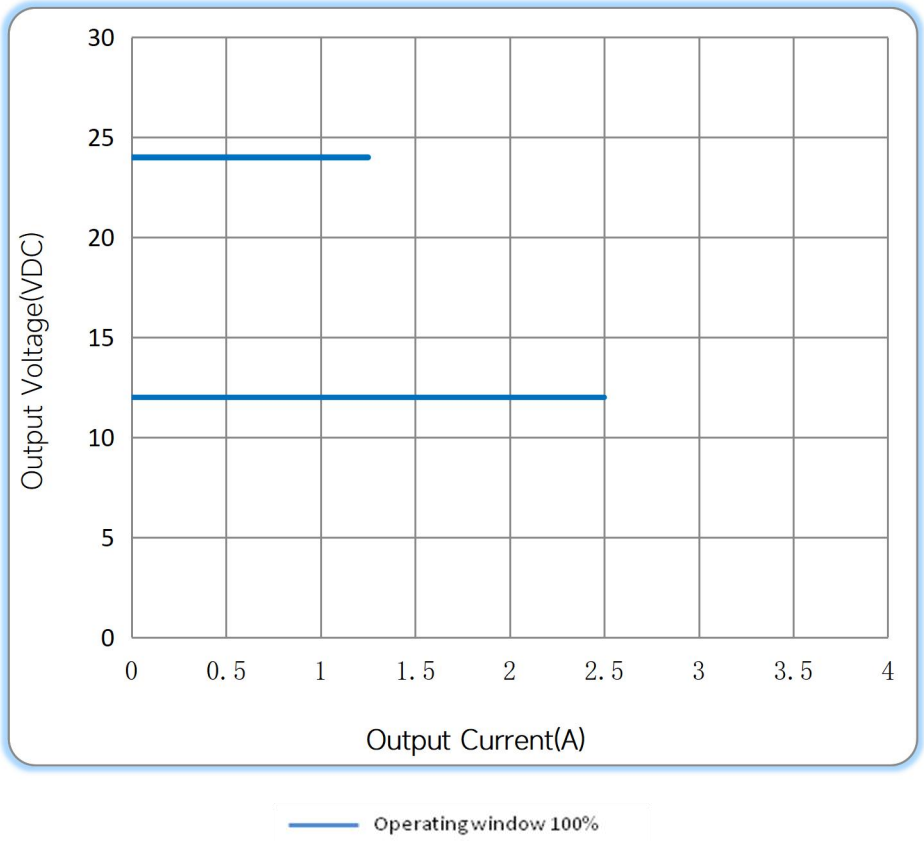


## ◆ Revision Updates

| ITEM | BEFORE | AFTER | VERSION | DATE |
|---|---|---|---|---|
| Initial | | | A | 2023/07/12 |
| | | | | |

Remark:The final interpretation of the contents of the specification belongs to Eaglerise Electric & Electronic (China) Co., Ltd.