# 40W Constant Current power supply

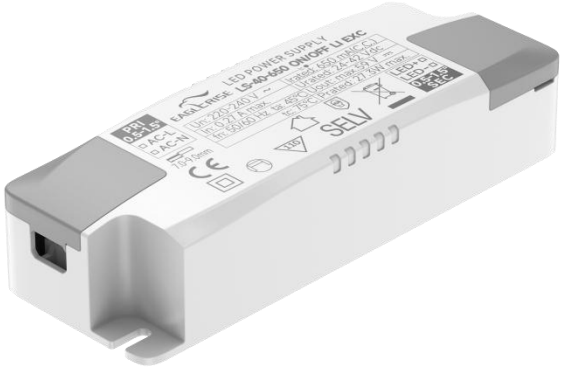

■**Approve**

Features

- For luminaries of protection Class II, SELV, Independent
- Input Voltage 220-240VAC
- Protections: OLP/OVP/SCP/OTP
- Power Factor: ≥0.95
- Efficiency: >88%
- 5 years warranty

Applications

- LED Panel
- Ceiling Light

## ◆ Description

LS-40-XXX ON/OFF LI EXC is a 40W constant current LED driver with 600 to 1050mA output current and a forward voltage range from 24 to 42Vdc.With it's compact dimensions from 116 x 41 x 26 mm.It is easy to integrate in LED panel and Ceiling lights. To ensure trouble-free operation, protection is provided against output short circuit, over load, over voltage,over temperature and open circuit.

## ◆ Model code

LS-40-XXX ON/OFF LI EXC

- Flicker-free
- Dimming type
- Current
- Power
- Series

## ◆ Specification

| | | | | | | |
|---|---|---|---|---|---|---|
| Output | Constant Current | 600 | 650 | 700 | ... | 1050 |
| | Voltage Range | 24-42V | | | ... | 24-38.5 |
| | Unload voltage Max. | 59VDC | | | | |
| | Current Accuracy | ±5% | | | | |
| | Output HF current ripple( ≥ | ±5% | | | | |
| | Output LF current ripple( ≤ | ±5% | | | | |
| | SVM | ≤0.4@Full Load | | | | |
| | Pst | ≤1@Full Load | | | | |
| | Efficiency(Typ.) | >88%@Full Load,230VAC | | | | |
| Input | Rated input voltage | 220-240VAC | | | | |
| | Range of input voltage | 198-264VAC | | | | |
| | Frequency(Hz) | 50/60 Hz | | | | |
| | Power Factor | ≥0.95@Full Load，230VAC | | | | |
| | Input Current max | 0.27A MAX.@Full Load，220-240VAC | | | | |
| | Start-up time | ＜0.5S | | | | |
| | Unload Power Consumption | ≤0.5W | | | | |
| | THD | <10%@Full load | | | | |
| Protection | Over Voltage Protection | 59VDC | | | | |
| | | YES/Auto Resume | | | | |
| | Over Load Protection | YES/Auto Resume | | | | |
| | Short circuit Protection | YES/Auto Resume | | | | |
| capability | Surge capability (L-N) | 1KV | | | | |
| | Surge capability | NA | | | | |
| Environment | Operating Temperature | -20℃~+45℃ | | | | |
| | Humidity | 20%-90%RH | | | | |
| | Tc（Max) | 75℃ | | | | |
| | Storage Temperature | -20℃...+60℃ | | | | |
| | Life time | ＞30000h@Tc=75℃ | | | | |
| | Noise | ≤25dB(A)@20cm | | | | |
| Dimming | Three-level Dimming | 100%-50%-12%( with memory function ) | | | | |
| Surface | Dimension | 116x41x26(LXWXH)mm | | | | |
| | material | PC | | | | |
| Standards | Safety | GB19510. 1, GB19510. 14;IEC61347- 1, IEC61347-2- 13;AS/NZS 61347- 1 | | | | |
| | EMC | GB/T17743, GB17625. 1;EN55015, EN61000-3-2, EN61000-3-3, EN61547;EN55015, EN61000-3-2, EN61000-3-3, EN61547,EN 62493;EN61000-4-5;EN61000-4-2,3,4,5,6,8,11, EN61547 | | | | |
| | Energy Efficiency | Erp2.0 EU 2019/2020 | | | | |

| | | |
|---|---|---|
| | RoHS | RoHS (2011/65/EU) (EU)2015/863 |
| Note | 1.All parameters not specially mentioned are measured at 230VAC input , full load and 25℃ of ambient temperature.<br>2.Ripple & Noise are measured at 20MHz of bandwidth by using a 300mm twisted pair-wire terminated with a 0.1uF & 47 uF parallel capacitor.<br>3.The over-temperature protection of the product is provided by the IC.<br>4.All Eaglerise power supply are complied with EMI regulations. Since they are belong to component and will be installed inside system enclosure. When they are integrated into a system, the EMI characteristics of the system must be re-verified again. | |

## ◆ Model list

| Number | Model number | Output | | | |
|---|---|---|---|---|---|
| | | Current (mA) | Voltage (VDC) | Voltage No load (VDC) | Power (W) |
| 1 | LS-40-600 ON/OFF LI EXC | 600 | 24-42 | 59 | 25.2 |
| 2 | LS-40-650 ON/OFF LI EXC | 650 | | | 27.3 |
| 3 | LS-40-700 ON/OFF LI EXC | 700 | | | 29.4 |
| 4 | LS-40-750 ON/OFF LI EXC | 750 | | | 31.5 |
| 5 | LS-40-800 ON/OFF LI EXC | 800 | | | 33.6 |
| 6 | LS-40-850 ON/OFF LI EXC | 850 | | | 35.7 |
| 7 | LS-40-900 ON/OFF LI EXC | 900 | | | 37.8 |
| 8 | LS-40-950 ON/OFF LI EXC | 950 | | | 39.9 |
| 9 | LS-40-1000 ON/OFF LI EXC | 1000 | 24-40 | | 40 |
| 10 | LS-40-1050 ON/OFF LI EXC | 1050 | 24-38.5 | | 40.4 |

## ◆ Inrush Current

| Ipeak | Twidth | B10 | B16 | B20 | C10 | C16 | C20 |
|---|---|---|---|---|---|---|---|
| 19.5A | **180μs** | 23pcs | 27pcs | 46pcs | 29pcs | 47pcs | 59pcs |

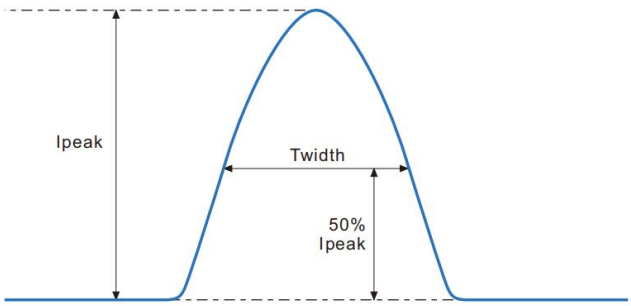


Remarks:

1.The number of drives mounted under different MCBs in the table is the maximum value. Please do not exceed this number during installation.

2.Different brands and models of miniature circuit breakers, the number of drives mounted will be slightly different.

## ◆ Wiring diagram

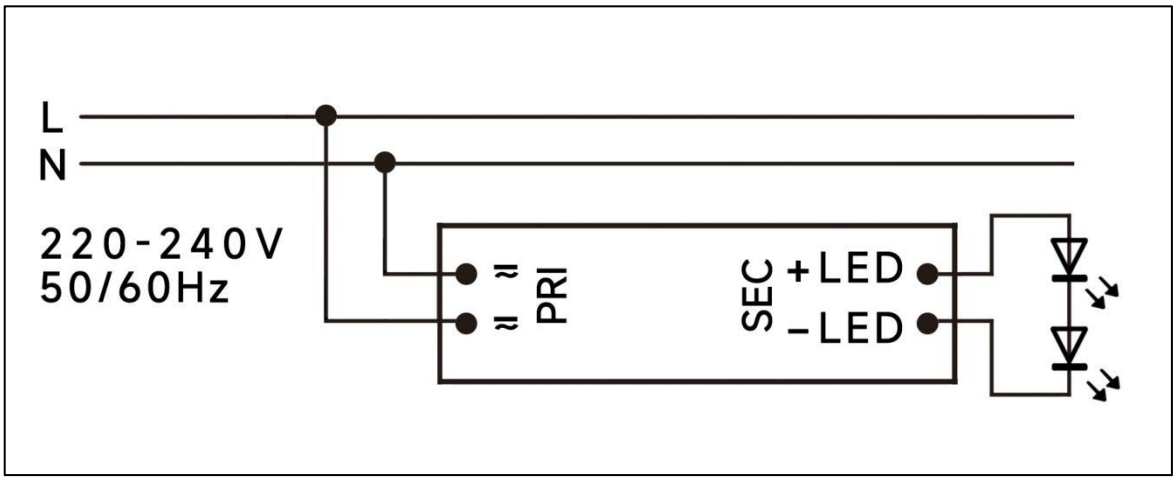

## ◆ 2D diagram

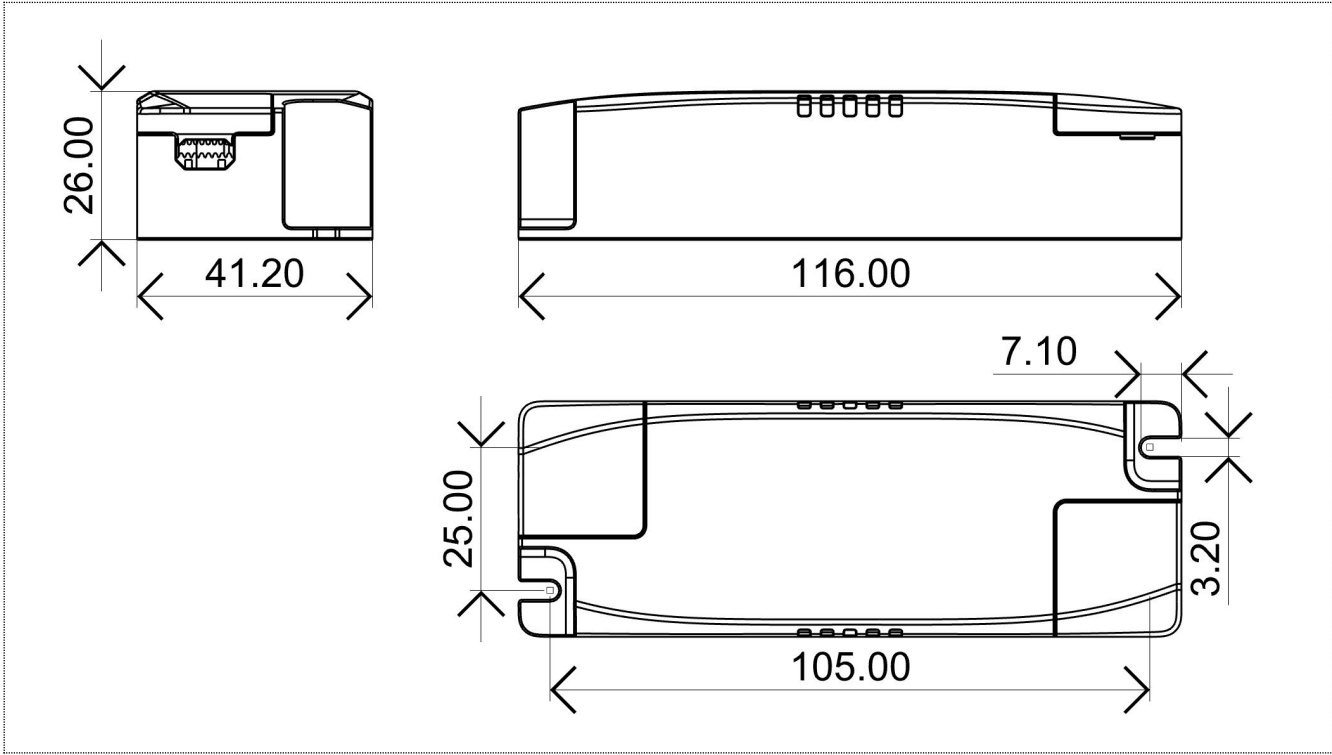


## ◆ Wiring & Connections

| Specification item | | Value （Unit ） |
|---|---|---|
| Input | Input wire cross-section | 0.5...1.5 $mm^2$ |
| | Input wire gauge. | 16...20 AWG |
| | Input wire strip length | 7...9mm |
| Output | Output wire cross-section | 0.5...1.5 $mm^2$ |
| | Output wire gauge. | 16...20 AWG |
| | Output wire strip length | 7...9mm |

Note:Solid wire is risky to use on an angled terminal.Stranded wire is recommended for this kind of use.

## ◆ Packaging

| Model | Product Dimensions(mm) | weight/piece | Outer carton dimension(mm) | Quantity/carton | Net weight/carton(Kg) | Gross weight/carton(Kg) |
|---|---|---|---|---|---|---|
| LS-40-XXX ON/OFF LI EXC | 116x41x26mm | 0.085 | 370X275X215mm | 126 | 10.7 | 11.3 |

## ◆ Curve for LS-40-XXX ON/OFF LI EXC, Io=1050mA

### Lifetime vs. Ambient Temperature Curve

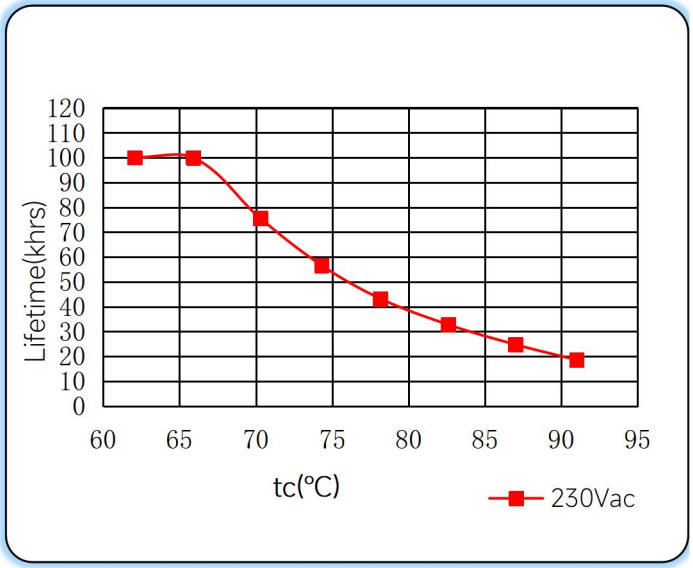


### Efficiency vs. Load

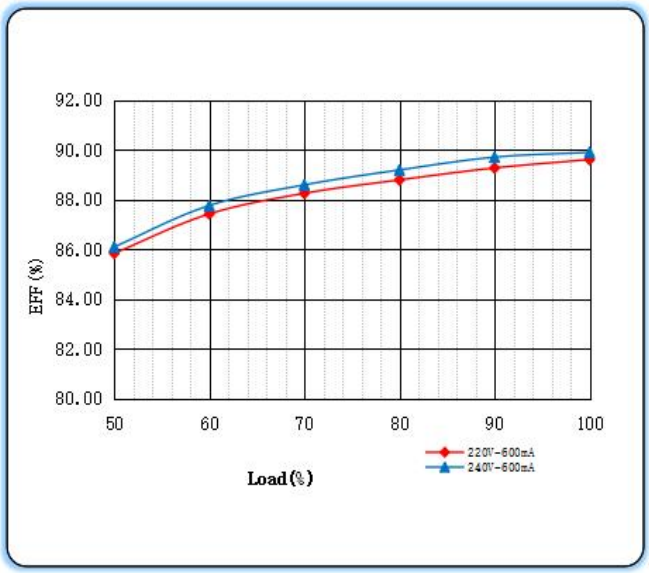


### Power Factor Characteristics

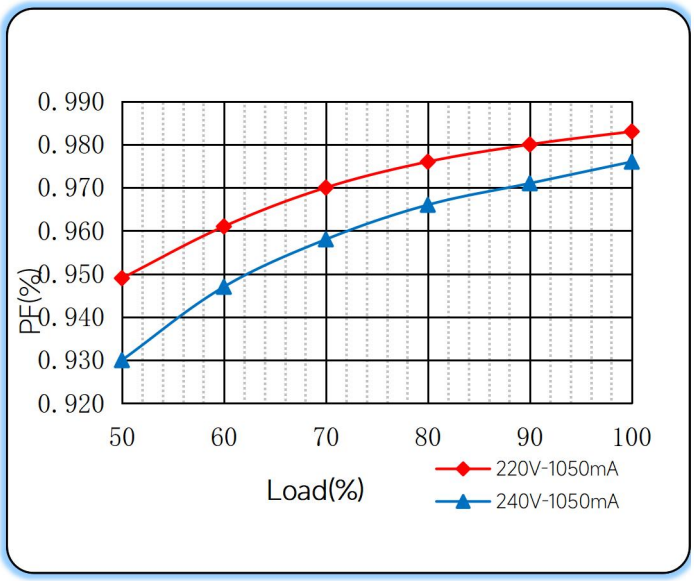


### THD vs. Load

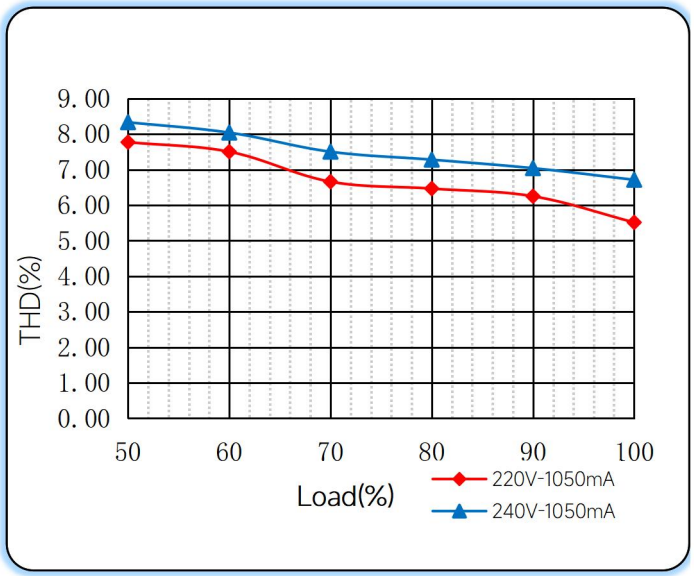

## ◆ Operation

Reset Mode— Power off and on twice within 1 second to reset.

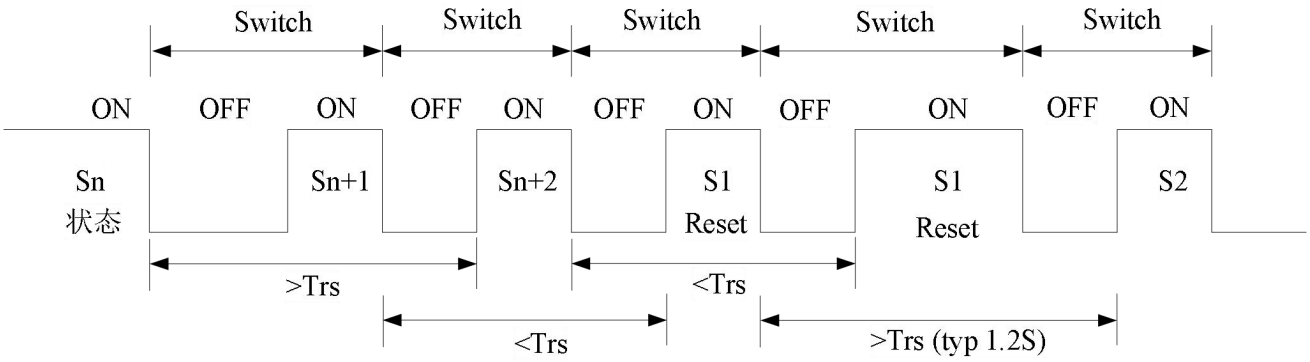


If shutdown takes ~6.4s or a reset ("OFF→ON→OFF") is executed in ~1.2s,a sync issue might arise.

However, given the ±5% time tolerance,the risk window is minimal, and the occurrence probability is negligible.

### Signal Detection Requirements

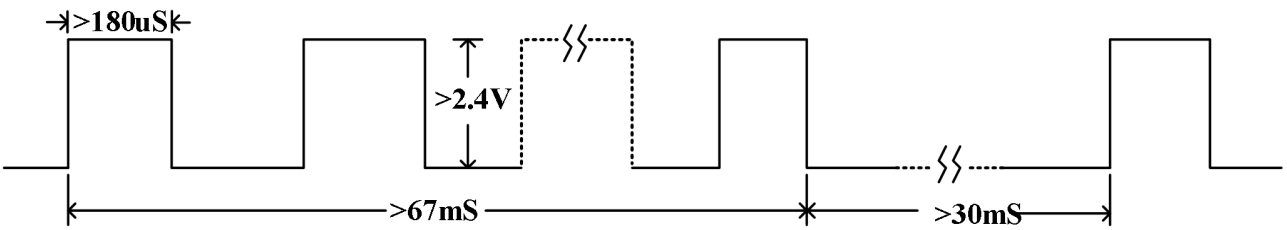


The S4165M determines power ON/OFF states by detecting pulse signals or high/low levels through the CLK pin. The pulse signal must meet the following requirements:

- Pulse width: >180 μs
- Pulse amplitude: >2.4V (AC signals detectable; for design margin, >4V recommended).

To suppress noise interference, the IC incorporates:

- Power-on delay T<sub>d(on)</sub>: 67ms (typ. at room temp) to confirm ON state.
- Power-off delay T<sub>d(off)</sub>: 30ms (typ. at room temp) to confirm OFF state.

State transition logic:

- Shutdown: Triggered only after detecting a valid CLK signal for >67ms.
- Power-on: Activated after >30ms of no valid CLK signal detection.

## ◆ Operating window

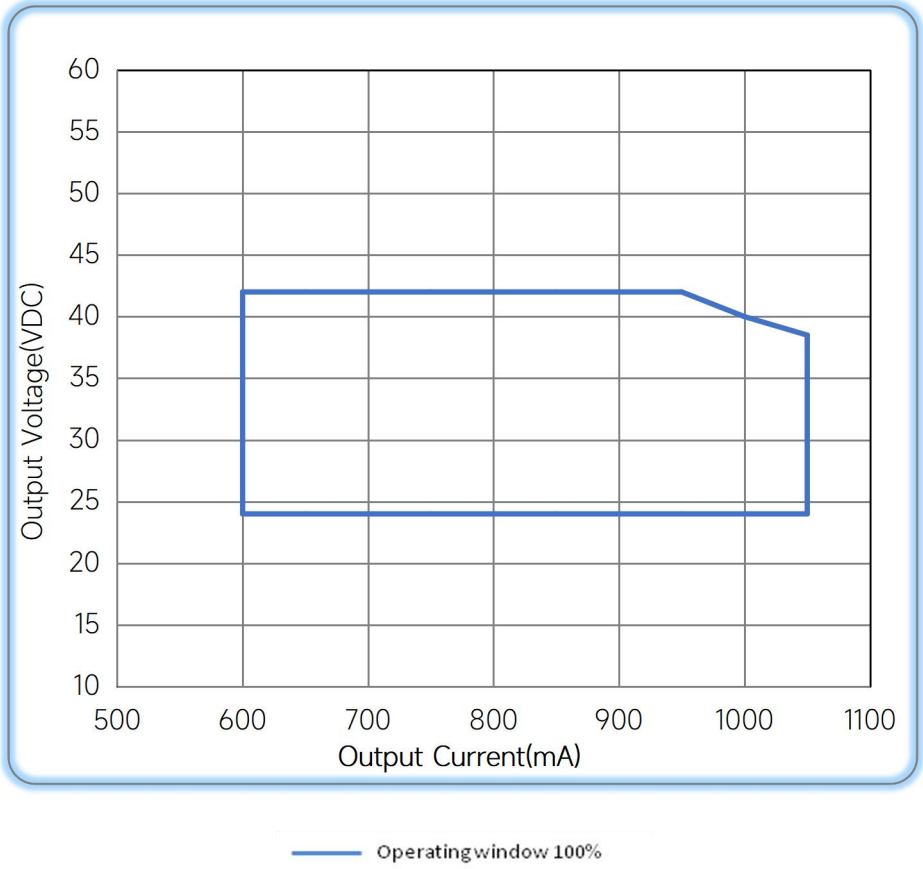


## ◆ Revision Updates

| ITEM | BEFORE | AFTER | VERSION | DATE |
|---|---|---|---|---|
| Initial | | | A | 2024/11/12 |
| Tc（Max) | 80℃ | 75℃ | B | 2025/06/06 |

Remark:The final interpretation of the contents of the specification belongs to Eaglerise Electric & Electronic (China) Co., Ltd