40W Triac Dimming power supply

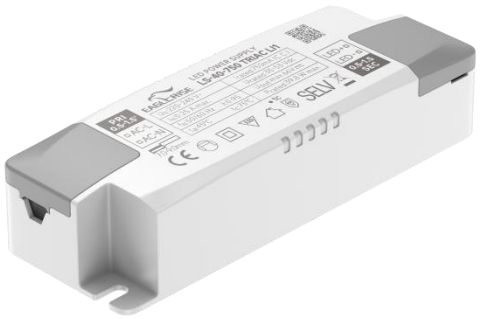

Features

- For luminaries of protection Class II, SELV, Independent
- Input Voltage: 220-240VAC
- Protections: SCP/OLP/OVP/OTP
- Power Factor: > 0.95
- Efficiency: 87%
- 5 years warranty
- IP20

Applications

- LED panel、LED down light

■Approve

CE CB EAC CCC SELV

◆ Description

LS-40-XXX TRIAC LI1 is a 40W constant current LED driver that operates from 198-264Vac input with 700-1050mA output current. With it's compact dimensions from 135 x 41.2 x 25 mm it is easy to integrate in LED panel, pendant light and down light products. To ensure trouble-free operation, protection is provided against output short circuit and over Load.

◆ Model code

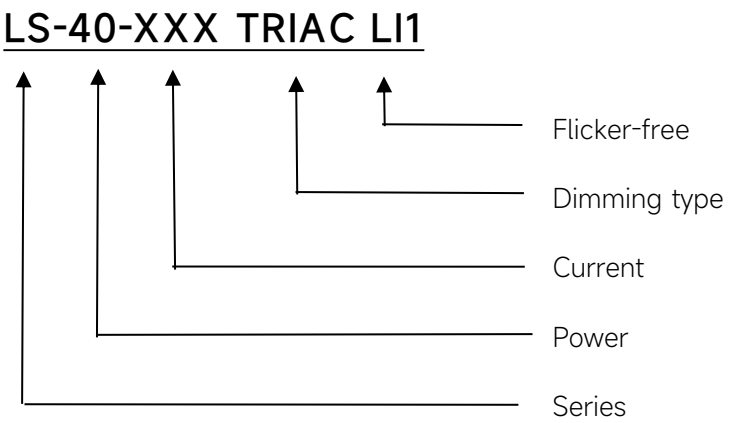

◆ Specification

Output	Constant Current (mA)	700	750	800	850	...	1050
	Voltage Range(VDC)	36-54	35-53	33-50	31-47	...	28-40
	Unload voltage Max.	70VDC				59VDC	
	Current Accuracy	±5%@220-240V					
	Output HF current ripple(≥1KHz)	±5%					
	Output LF current ripple(≤120Hz)	±5%					
	SVM	≤0.4					
	Pst	≤1					
	Efficiency(Typ.)	87%					
Input	Rated input voltage	220-240VAC					
	Range of input voltage	198-264VAC					
	Maximum voltage	300VAC@1 h maximum,unit might not operate in this abnormal condition					
	Frequency(Hz)	50/60 Hz					
	Displacement factor	≥0.9					
	Power Factor	>0.95@Full load,230VAC					
	Input Current max (mA)	0.25A					
	Start-up time	＜0.5S					
	No Load Power	≤0.5W					
	THD (Typ.)	<25%					
Dimming	Dimming	YES					
	Dimming mode	Triac，Leading edge & trailing edge dimmable					
	Dimming depth	8%@220-240V					
	Dimming current range	8 ~ 100%					
Protection	Over Load Protection	103-130%					
		YES/Auto Resume					
	Over Voltage Protection	59VDC					
		YES/Auto Resume					
	Short circuit Protection	YES/Auto Resume					
capability	Surge capability (L-N)	1KV					
	Surge capability (L/N-Ground)	NA					
Environment	Operating Temperature	-20℃~+45℃					
	Humidity	20%-90%RH					
	Tc	85℃					
	Storage Temperature	-25℃~+60℃					
	Life time	＞50000h@Tc=75℃					
	Ripple&Noise	≤30dB(A)@20cm					
Surface	Dimension	135 x41.2 x 25mm					
	material	PC					

Standards	Safety	GB19510. 1, GB19510. 14;IEC61347- 1, IEC61347-2- 13;EN61347- 1, EN61347-2-13; EN62384
	EMC	GB/T17743, GB17625. 1;EN55015, EN61000-3-2, EN61000-3-3, EN61547;EN61000-4-5;EN61000-4-2,3,4,5,6,8,11, EN61547
	Energy Efficiency	Erp2.0 EU 2019/2020
	RoHS	RoHS (2011/65/EU) (EU)2015/863
Note	1.All parameters not specially mentioned are measured at 230VAC input , full load and 25℃ of ambient temperature. 2.Ripple & Noise are measured at 20MHz of bandwidth by using a 300mm twisted pair-wire terminated with a 0.1uF & 47 uF parallel capacitor. 3.The over-temperature protection of the product is provided by the IC. 4.All Eaglerise power supply are complied with EMI regulations. Since they are belong to component and will be installed inside system enclosure. When they are integrated into a system, the EMI characteristics of the system must be re-verified again.	

◆ Model list

Number	Model number	Output			
		Current (mA)	Voltage (VDC)	Voltage No load (VDC)	Power (W)
1	LS-40-700 TRIAC LI1	700	36-54	70	37.8
2	LS-40-750 TRIAC LI1	750	35-53	70	39.8
3	LS-40-800 TRIAC LI1	800	33-50	70	40
4	LS-40-850 TRIAC LI1	850	31-47	70	40
5	LS-40-900 TRIAC LI1	900	27-42	59	37.8
6	LS-40-950 TRIAC LI1	950	28-40	59	38
7	LS-40-1000 TRIAC LI1	1000		59	40
8	LS-40-1050 TRIAC LI1	1050		59	42

◆ Inrush Current

I_{peak}	Twidth	B10	B16	B20	C10	C16	C20
4.44A	28μs	32pcs	51pcs	64pcs	32pcs	51pcs	64pcs

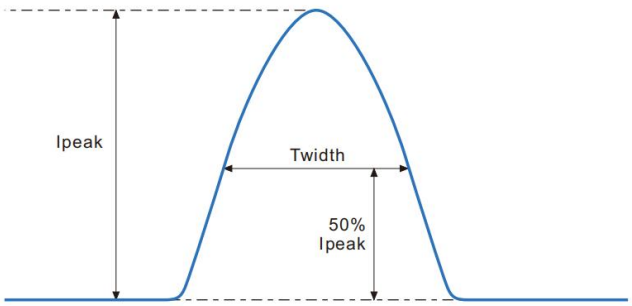

Remarks:

1.The number of drives mounted under different MCBs in the table is the maximum value. Please do not exceed this number during installation.

2.Different brands and models of miniature circuit breakers, the number of drives mounted will be slightly different.

◆ Wiring diagram

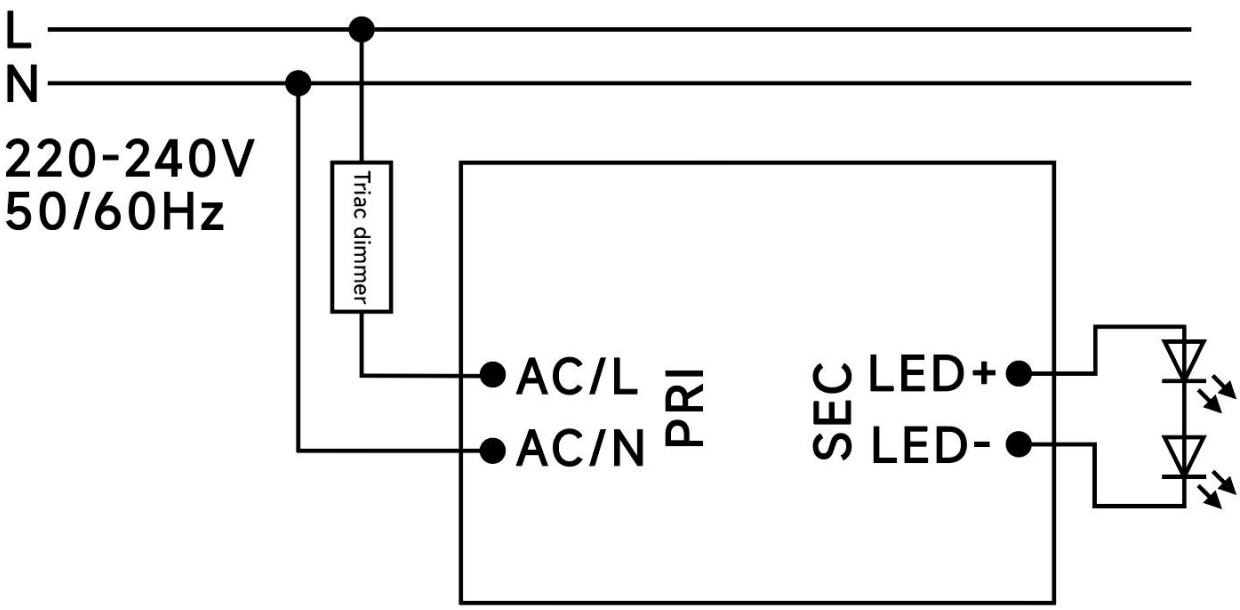

◆ 2D diagram

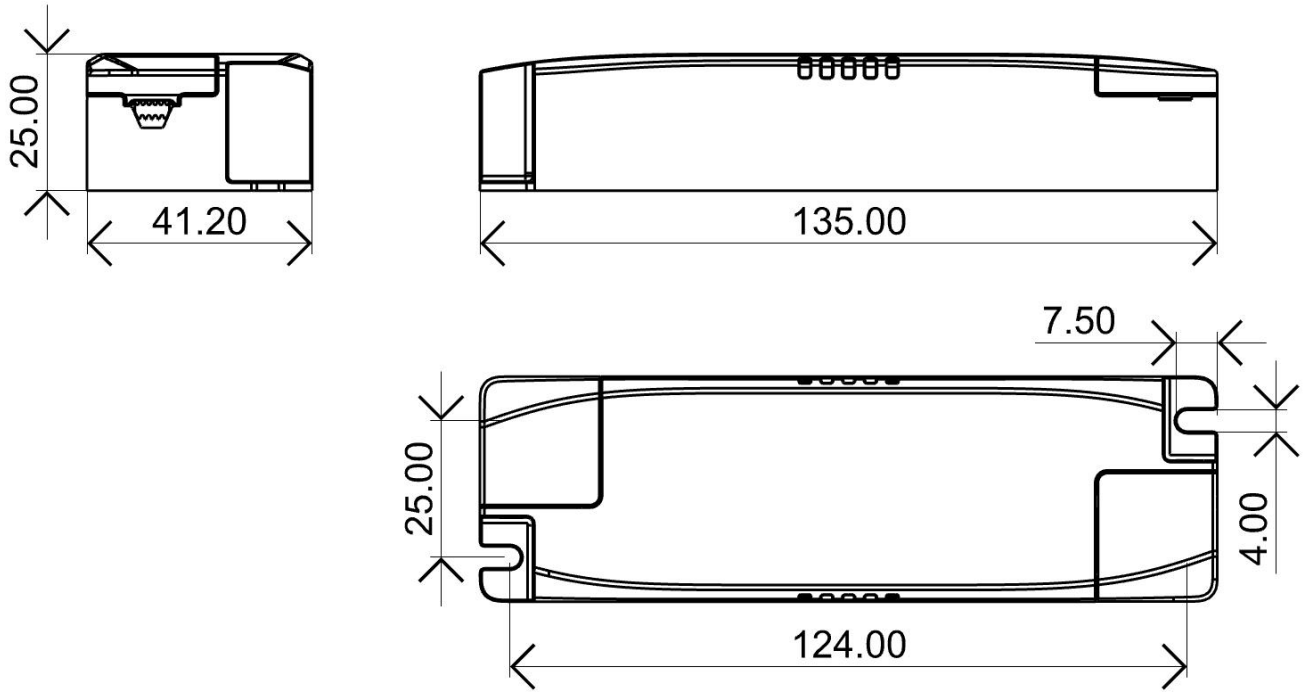

Terminal

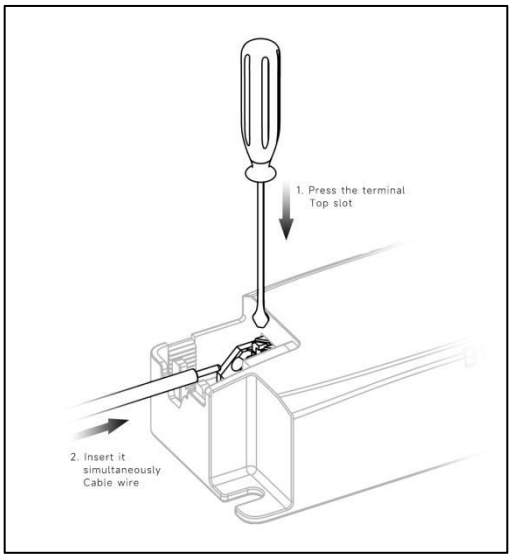

◆ Wiring & Connections

Specification item		Value （Unit ）
Input	Input wire cross-section	0.5...1.5 mm^2
	Input wire gauge.	16...20 AWG
	Input wire strip length	7...9mm
Output	Output wire cross-section	0.5...1.5 mm^2
	Output wire gauge.	16...20 AWG
	Output wire strip length	7...9mm

◆ Recommended wire

Wire cross-section	Wire type
2*0.5mm^2	H03VVH2-F 2core
2*0.75mm^2	H03VVH2-F 2core
1.5mm^2	CCC 08(RV-90)
16AWG(1.25mm^2)	UL1015

Note:Solid wire is risky to use on an angled terminal.Stranded wire is recommended for this kind of use.

◆ Packaging

Model	Product Dimensions(mm)	weight/piece	Outer carton dimension(mm)	Quantity/carton	Net weight/carton(Kg)	Gross weight/carton(Kg)
LS-40-XXX TRIAC LI1	135X41.2X25mm	0.126	370X275X215mm	60	7.56	8.46

◆ Curve for LS-40-XXX TRIAC LI1, Io=1050mA

Lifetime vs. Temperature Curve

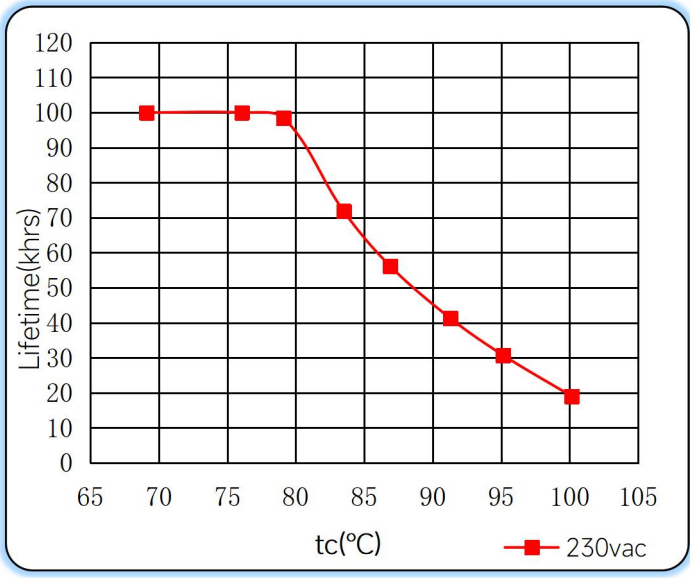

Efficiency vs. Load

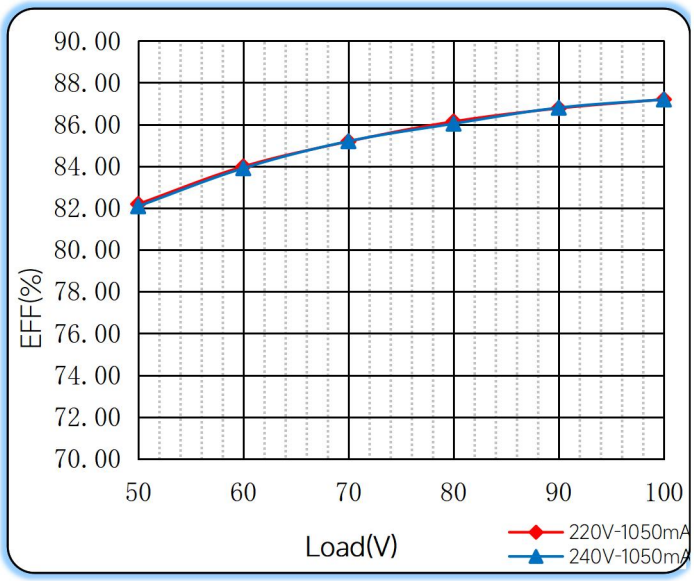

Power Factor Characteristics

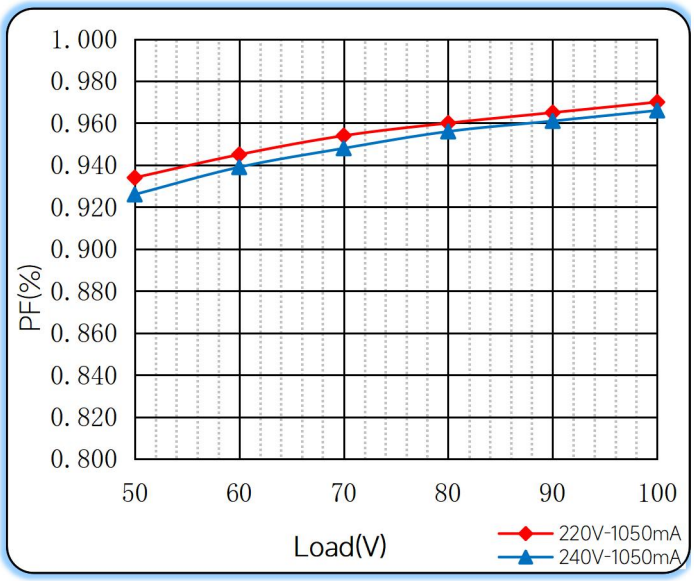

THD vs. Load

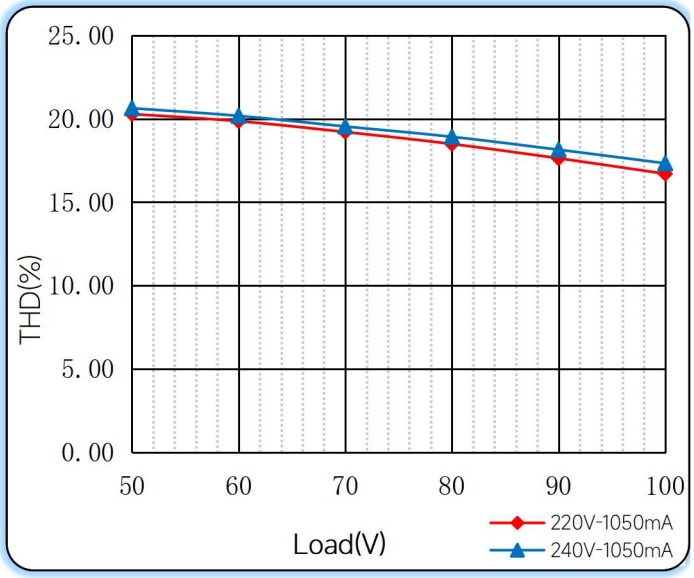

◆ Operating window

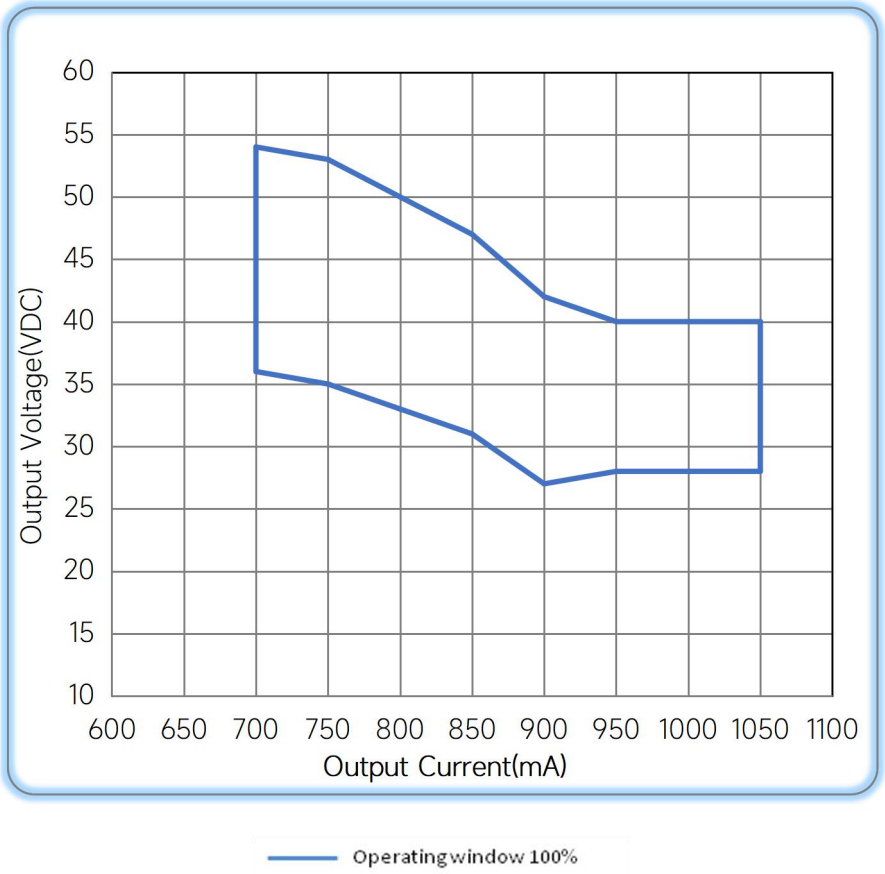

◆ Revision Updates

ITEM	BEFORE	AFTER	VERSION	DATE
Initial			A	2024/08/15
Tc	90℃	85℃	B	2024/11/29
Unload voltage	59VDC	70VDC(700-850mA)	C	2025/09/27

Remark:The final interpretation of the contents of the specification belongs to Eaglerise Electric & Electronic (China) Co., Ltd.