75W constant Voltage-LS Series

Features

- Class II，SELV，Independent
- Input Voltage 220-240VAC
- Protections: SCP/OLP/OVP/OTP
- Power Factor：≥0.95(Typ.)
- Efficiency：≥90%@48V(Typ.)
- 5 years warranty

Applications

- LED strips

■Approve

Note:Non IC

◆ Description

LS-75-48 LI EXC is a 75W constant voltage LED driver that operates from 198-264Vac input with 48V output voltage. With it's compact dimensions from 168 x 38x 30mm. It is easy to integrate in LED strips products. To ensure trouble-free operation, protection is provided against output short circuit and over Load.

◆ Model code

LS-75-48 LI EXC

- Flicker-free
- Voltage
- Power
- Series

◆ Specification

Output	Constant Voltage	48VDC
	Current Range	0-1.56A
	Voltage Accuracy	±5%
	Output HF current ripple(≥1KHz)	±1%
	Output LF current ripple(≤120Hz)	±1%
	SVM	≤0.4@Full Load
	Pst	≤1@Full Load
	Efficiency(Typ.)	≥90%@Full load,230V
Input	Rated input voltage	220-240VAC
	Range of input voltage	198-264VAC
	Frequency(Hz)	50/60 Hz
	Displacement factor	≥0.95
	Power Factor	≥0.95@Full load,230V
	Input Current max	0.49A
	Start-up time	＜0.5S
	No Load Power	≤0.5W
	THD (Typ.)	＜10%@Full load,230V
Protection	Over Load Protection	105-150%
		YES/Auto Resume
	Over Voltage Protection	＞49.8VDC
		YES/Auto Resume
	Short circuit Protection	YES/Auto Resume
	Over Temperature Protection	YES/Auto Resume
capability	Surge capability (L-N)	1KV
	Surge capability (L/N-Ground)	2KV
Environment	Operating Temperature	-20℃~+45℃
	Humidity	20%-90%RH
	Tc	90℃
	Storage Temperature	-20℃~+60℃
	Life time	＞50000h@Tc=85℃
	Ripple & Noise	≤25dB(A)@20cm
Surface	Dimension	168X38X30(LXWXH)mm
	material	PC
Standards	Safety	GB19510. 1, GB19510. 14;EN61347- 1, EN61347-2- 13;S/NZS 61347- 1, AS/NZS 61347-2- 13
	EMC	GB/T17743, GB17625. 1;EN55015, EN61000-3-2, EN61000-3-3, EN61547;EN61000-4-5;EN 62493
	Energy Efficiency	Erp2.0 EU 2019/2020
	RoHS	RoHS (2011/65/EU) (EU)2015/863

Note	1.All parameters NOT specially mentioned are measured at 240VAC input , full load and 25℃ of ambient temperature. 2.Ripple & Noise are measured at 20MHz of bandwidth by using a 300mm twisted pair-wire terminated with a 0.1uF & 47 uF parallel capacitor. 3.Switch and dimmer are not recommended to connect between this product output and luminaries. 4.All Eaglerise power supply are complied with EMI regulations. Since they are belong to component and will be installed inside system enclosure. When they are integrated into a system, the EMI characteristics of the system must be re-verified again.

◆ Inrush Current

I_{peak}	T_{width}	B10	B16	B20	C10	C16	C20
35.2A	**246μs**	9pcs	14pcs	18pcs	15pcs	24pcs	31pcs

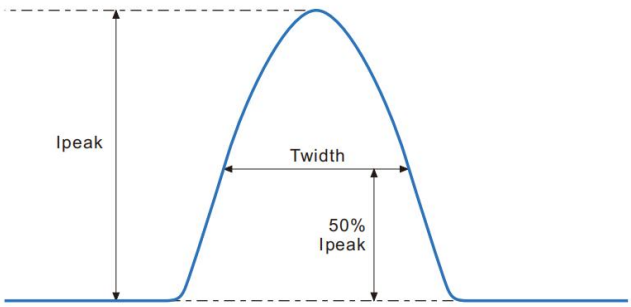

Remarks:
1.The number of drives mounted under different MCBs in the table is the maximum value. Please do not exceed this number during installation.
2.Different brands and models of miniature circuit breakers, the number of drives mounted will be slightly different.

◆ Wiring diagram

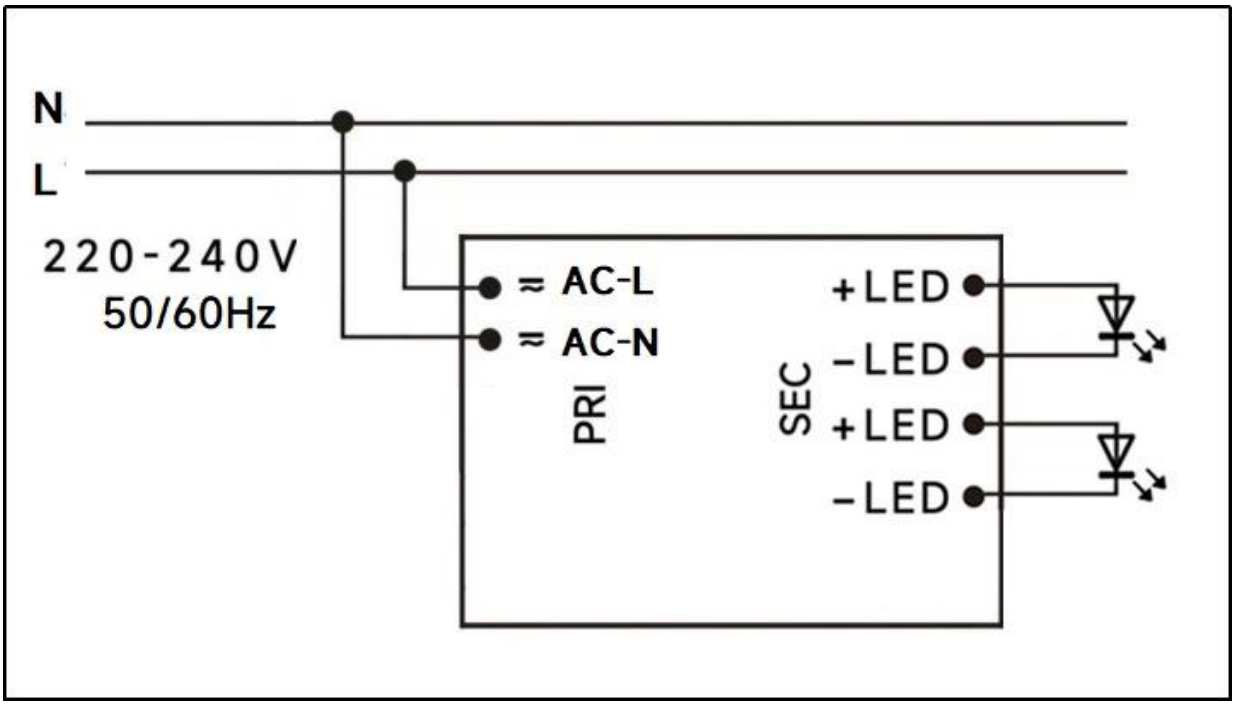

◆ 2D diagram

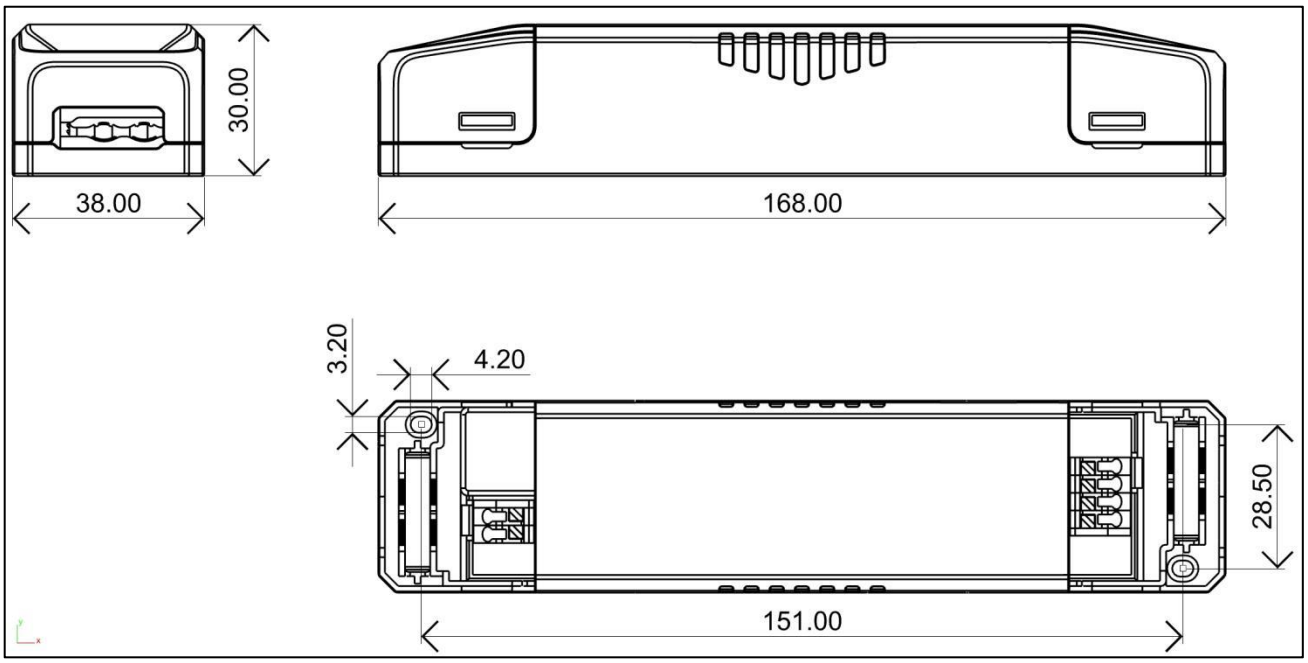

Terminal

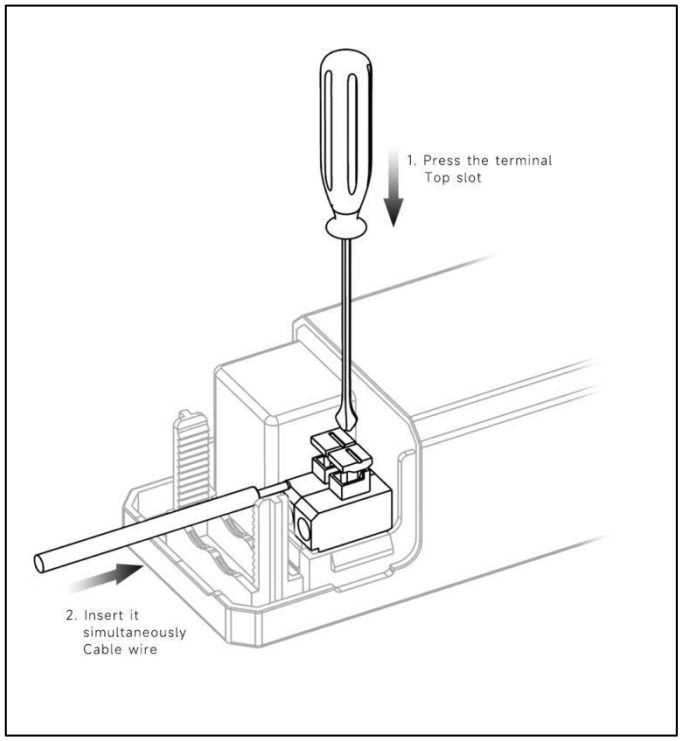

◆ Wiring & Connections

Specification item		Value （Unit ）
Input	Input wire cross-section	0.5...1.5 mm^2
	Input wire gauge.	16...20 AWG
	Input wire strip length	7...9mm
Output	Output wire cross-section	0.5...1.5 mm^2
	Output wire gauge.	16...20 AWG
	Output wire strip length	7...9mm

Note:Solid wire is risky to use on an angled terminal.Stranded wire is recommended for this kind of use.

◆ Curve for LS-75-48 LI EXC

Lifetime vs. Temperature Curve

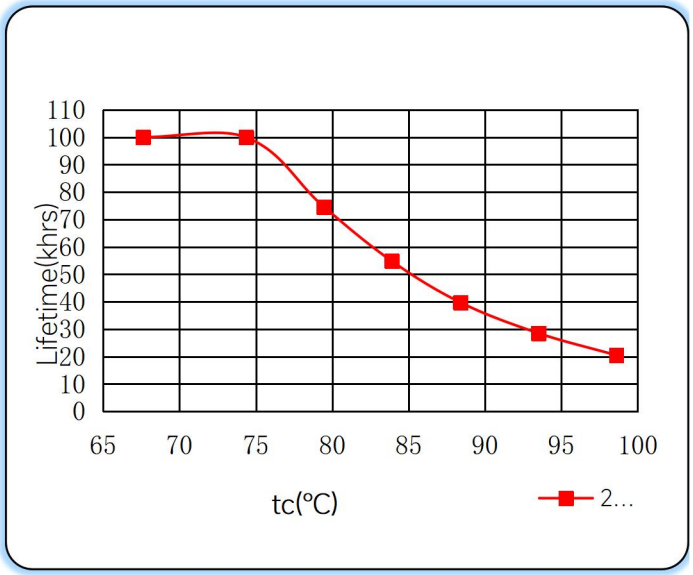

Efficiency vs. Load

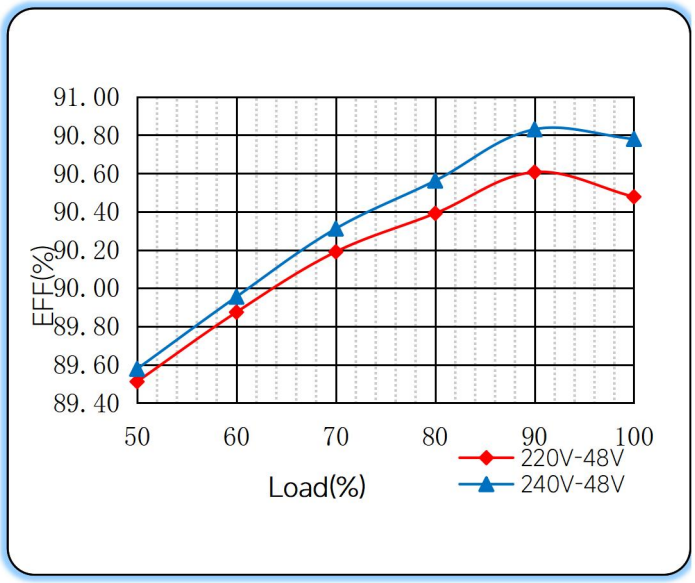

Power Factor Characteristics

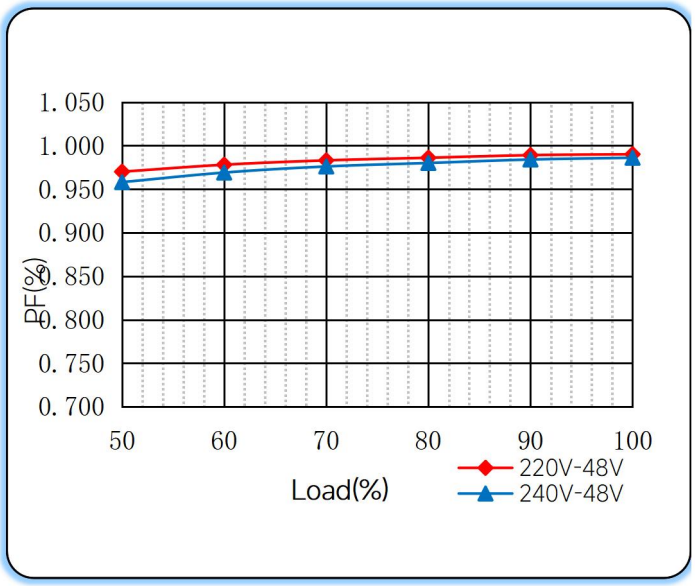

THD vs. Load

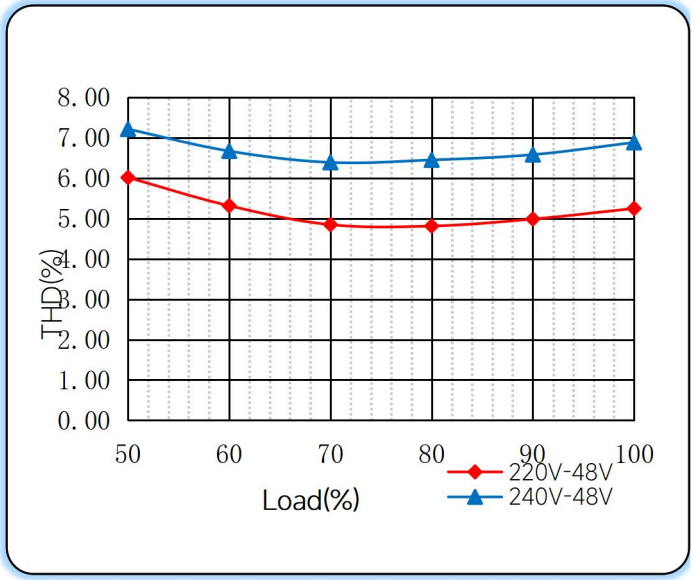

◆ Operating window

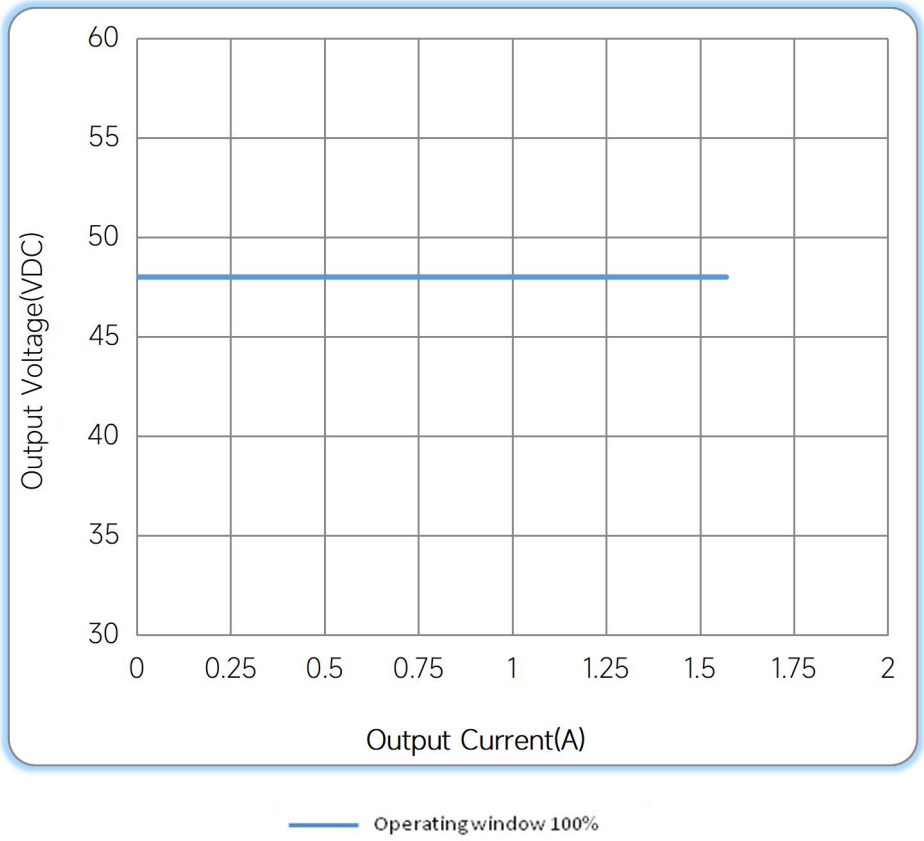

◆ Revision Updates

ITEM	BEFORE	AFTER	VERSION	DATE
Initial			A	2023/11/28
Ripple & Noise	≤20dB(A)@10cm	≤25dB(A)@20cm	B	2023/12/18

Remark:The final interpretation of the contents of the specification belongs to Eaglerise Electric & Electronic (China) Co., Ltd.