8W Triac Dimming power supply

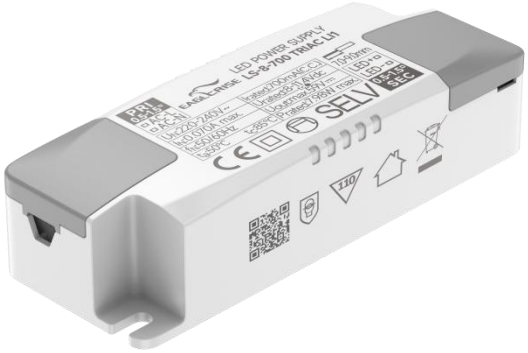

■Approve

CECB SELV

Features

- For luminaries of protection Class II, SELV, Independent
- Input Voltage: 220-240VAC
- Protections: SCP/OLP/OVP/OTP
- Power Factor: 0.9C
- Efficiency: 78%
- 5 years warranty
- IP20

Applications

- LED panel、LED down light

◆ Description

LS-8-XXX TRIAC LI1 is a 8W constant current LED driver that operates from 198-264Vac input with 100-700mA output current. With it's compact dimensions from 92 x 36 x 25 mm it is easy to integrate in LED panel, pendant light and down light products. To ensure trouble-free operation, protection is provided against output short circuit and over Load.

◆ Model code

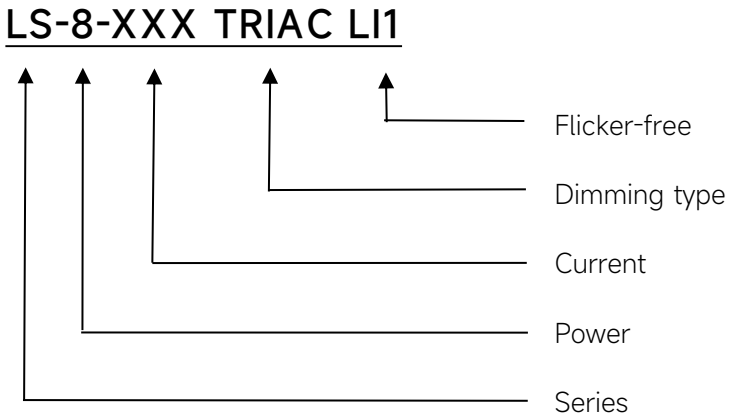

◆ Specification

Output	Constant Current (mA)	100	120	150	180	200	...	700
	Voltage Range(VDC)	28-40					...	8-11.4
	Unload voltage Max.	59VDC						28VDC
	Current Accuracy@220-240V	±9%	±8%	±7%		±5%		
	Output HF current ripple(≥1KHz)	±5%						
	Output LF current ripple(≤120Hz)	±5%						
	SVM	≤0.4						
	Pst	≤1						
	Efficiency(Typ.)	78%						75%
Input	Rated input voltage	220-240VAC						
	Range of input voltage	198-264VAC						
	Maximum voltage	300VAC@1 h maximum,unit might not operate in this abnormal condition						
	Frequency(Hz)	50/60 Hz						
	Displacement factor	≥0.9						
	Power Factor	0.9C@Full Load,230V						
	Input Current max (mA)	70mA						
	Start-up time	＜0.5S						
	No Load Power	≤0.5W						
	THD (Typ.)	<20%						
Dimming	Dimming	YES						
	Dimming mode	Triac，Leading edge & trailing edge dimmable						
	Dimming depth	10%@220-240V						
	Dimming current range	10 ~ 100%						
Protection	Over Load Protection	103-130%						
		YES/Auto Resume						
	Over Voltage Protection	59VDC						
		YES/Auto Resume						
	Short circuit Protection	YES/Auto Resume						
capability	Surge capability (L-N)	1KV						
	Surge capability (L/N-Ground)	NA						
Environment	Operating Temperature	-20℃~+50℃						
	Humidity	20%-90%RH						
	Tc	80℃						
	Storage Temperature	-25℃~+60℃						
	Life time	＞50000h@Tc=75℃						
	Ripple&Noise	≤30dB(A)@20cm						
Surface	Dimension	92 x36 x 25mm						

	material	PC
Standards	Safety	GB19510. 1, GB19510. 14;IEC61347- 1, IEC61347-2- 13;EN61347- 1, EN61347-2-13; EN62384
	EMC	GB/T17743, GB17625. 1;EN55015, EN61000-3-2, EN61000-3-3, EN61547;EN61000-4-5;EN61000-4-2,3,4,5,6,8,11, EN61547
	Energy Efficiency	Erp2.0 EU 2019/2020
	RoHS	RoHS (2011/65/EU) (EU)2015/863
Note	1.All parameters not specially mentioned are measured at 230VAC input , full load and 25°C of ambient temperature. 2.Ripple & Noise are measured at 20MHz of bandwidth by using a 300mm twisted pair-wire terminated with a 0.1uF & 47 uF parallel capacitor. 3.The over-temperature protection of the product is provided by the IC. 4.All Eaglerise power supply are complied with EMI regulations. Since they are belong to component and will be installed inside system enclosure. When they are integrated into a system, the EMI characteristics of the system must be re-verified again.	

◆ Model list

Number	Model number	Output			
		Current (mA)	Voltage (VDC)	Voltage No load (VDC)	Power (W)
1	LS-8-100 TRIAC LI1	100	28-40	59	4
2	LS-8-120 TRIAC LI1	120			4.8
3	LS-8-150 TRIAC LI1	150			6
4	LS-8-180 TRIAC LI1	180			7.2
5	LS-8-200 TRIAC LI1	200			8
6	LS-8-220 TRIAC LI1	220			8.8
7	LS-8-250 TRIAC LI1	250	16-24	40	6
8	LS-8-300 TRIAC LI1	300	18-24		7.2
9	LS-8-350 TRIAC LI1	350	18-24		8.4
10	LS-8-700 TRIAC LI1	700	8-11.4	28	8

◆ Inrush Current

I_{peak}	Twidth	B10	B16	B20	C10	C16	C20
1.92A	32.8μs	114pcs	182pcs	228pcs	114pcs	182pcs	228pcs

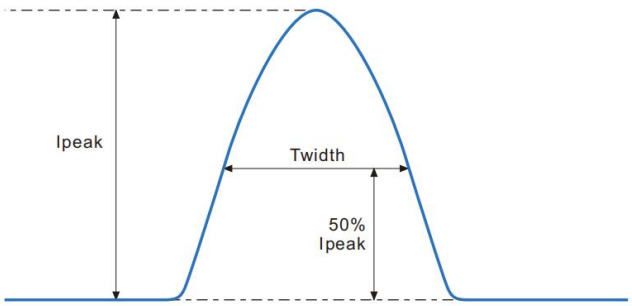

Remarks:

1.The number of drives mounted under different MCBs in the table is the maximum value. Please do not exceed this number during installation.

2.Different brands and models of miniature circuit breakers, the number of drives mounted will be slightly different.

◆ Wiring diagram

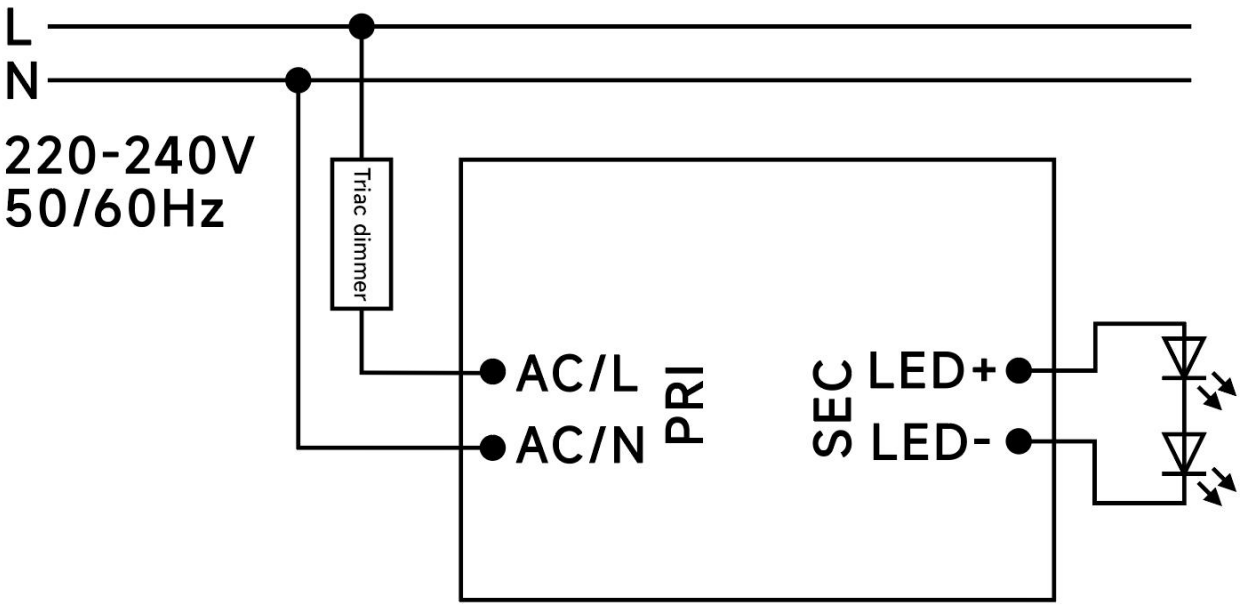

◆ 2D diagram

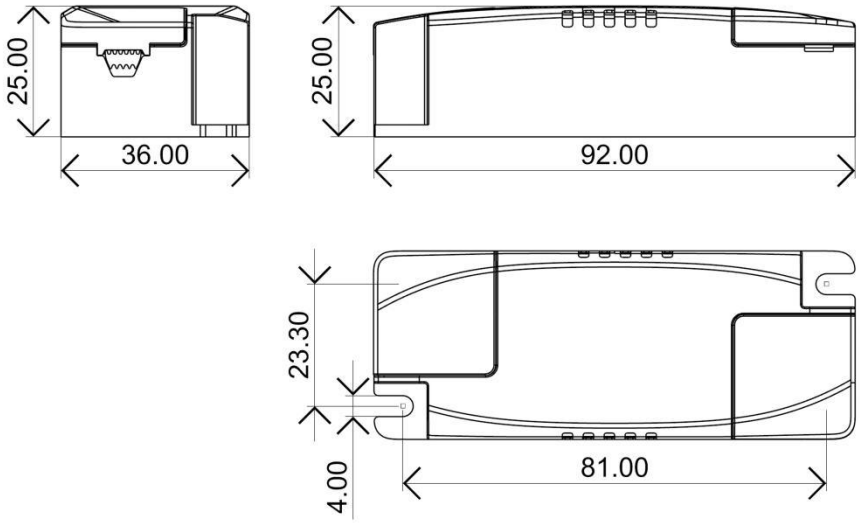

Terminal

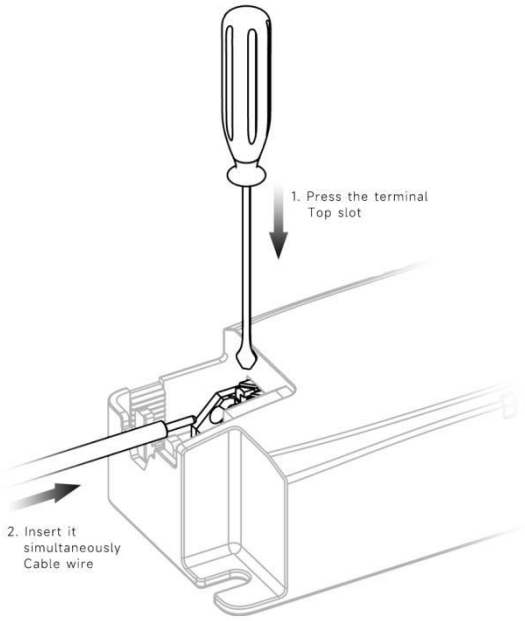

◆ Wiring & Connections

Specification item		Value （Unit ）
Input	Input wire cross-section	0.5...1.5 mm^2
	Input wire gauge.	16...20 AWG
	Input wire strip length	7...9mm
Output	Output wire cross-section	0.5...1.5 mm^2
	Output wire gauge.	16...20 AWG
	Output wire strip length	7...9mm

◆ Recommended wire

Wire cross-section	Wire type
2*0.5mm^2	H03VVH2-F 2core
2*0.75mm^2	H03VVH2-F 2core
1.5mm^2	CCC 08(RV-90)
16AWG(1.25mm^2)	UL1015

Note:Solid wire is risky to use on an angled terminal.Stranded wire is recommended for this kind of use.

◆ Packaging

Model	Product Dimensions(mm)	weight/piece	Outer carton dimension(mm)	Quantity/carton	Net weight/carton(Kg)	Gross weight/carton(Kg)
LS-8-XXX TRIAC LI1	92X36X25mm	0.048	370X275X215mm	180	8.64	9.26

◆ Curve for LS-8-XXX TRIAC LI1, Io=700mA

Lifetime vs. Temperature Curve

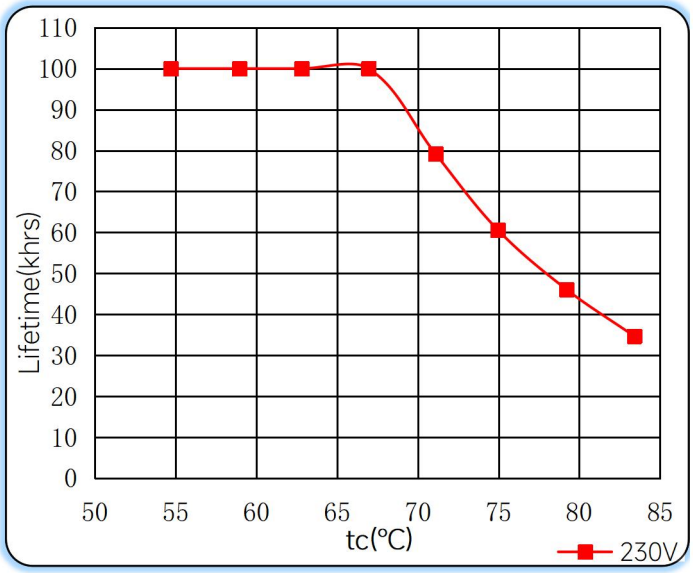

Efficiency vs. Load

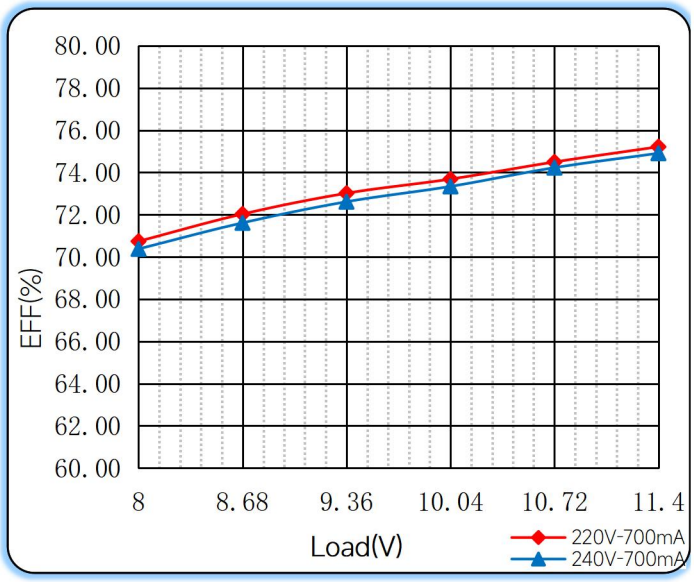

Power Factor Characteristics

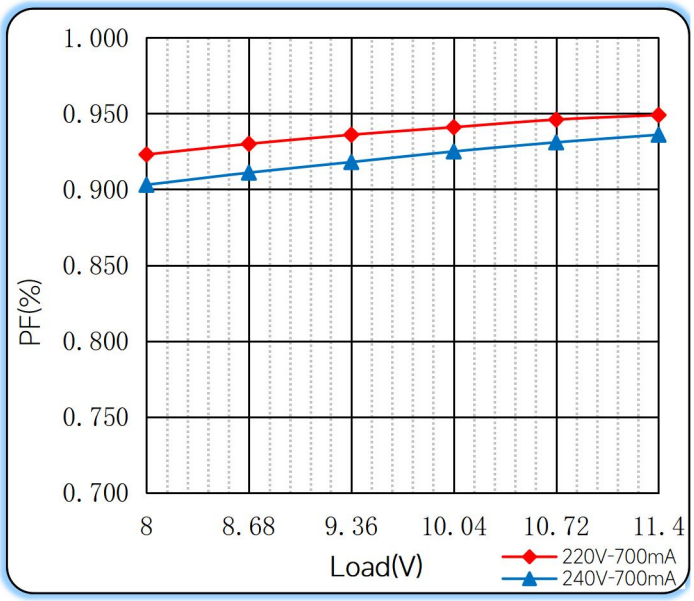

THD vs. Load

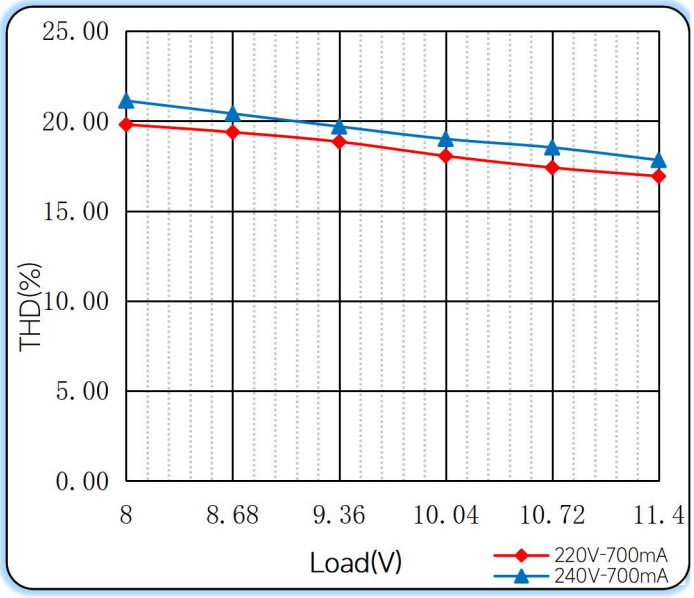

◆ Operating window

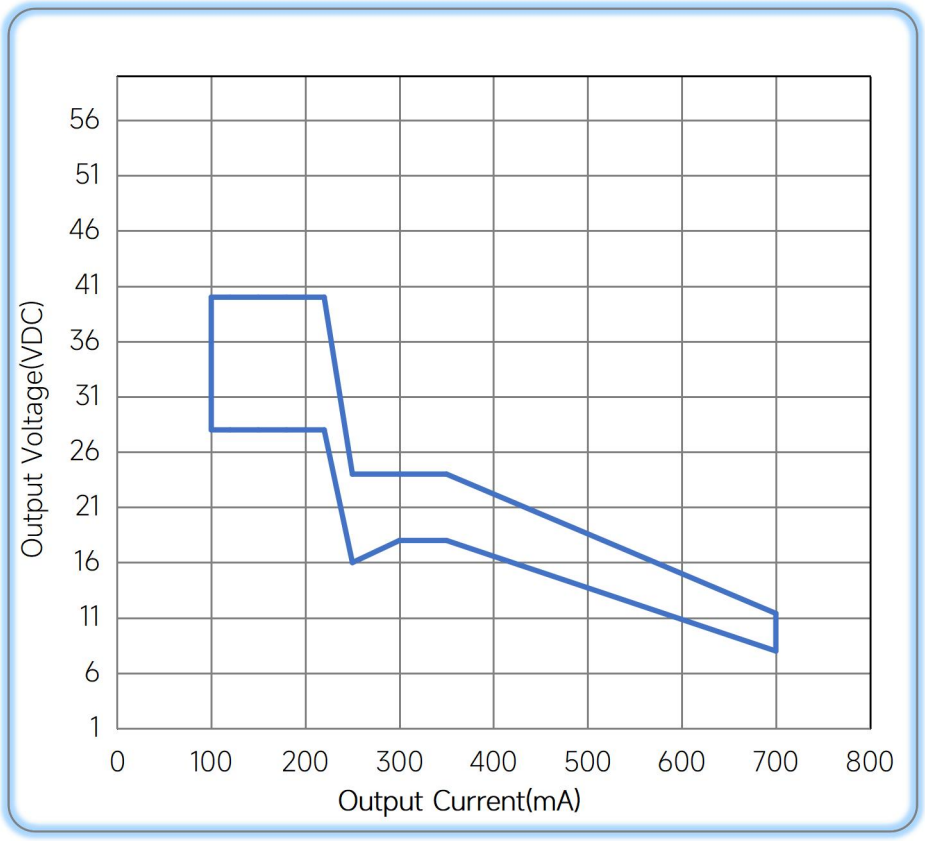

Operating window 100%

◆ Revision Updates

ITEM	BEFORE	AFTER	VERSION	DATE
Initial			A	2024/08/15
Tc	85℃	80℃	B	2025/01/16
Current Accuracy	7%@120mA	8%@120mA	C	2025/05/10
Power Factor		0.9C@Full Load,230V	D	2025/09/29

Remark:The final interpretation of the contents of the specification belongs to Eaglerise Electric & Electronic (China) Co., Ltd.